EPSON PRODUCT SUPPORT BULLETIN

Date:	04/07/2003	**Originator:**	TC
PSB #:	PSB.2003.04.004	**Authorization:**	Kas
Reference:	N/A	**Total Pages:**	1
Product(s):	EPSON Scanner Options		
Subject:	Part numbers for transparency adapter mounting screws (thumbscrews)		

This bulletin was created to inform you of the part numbers used for the thumbscrews (mounting screws) that secure the transparency units to the scanner.

Reason:
Epson Customers may need to replace these thumbscrews because they are missing or misplaced. Epson Dealers and Customer Care Centers may call Technical Support for assistance in locating the reference or part number for the thumbscrews. The location of the thumbscrews on the Product diagram is on the right hand side, and is often overlooked (See red box below)

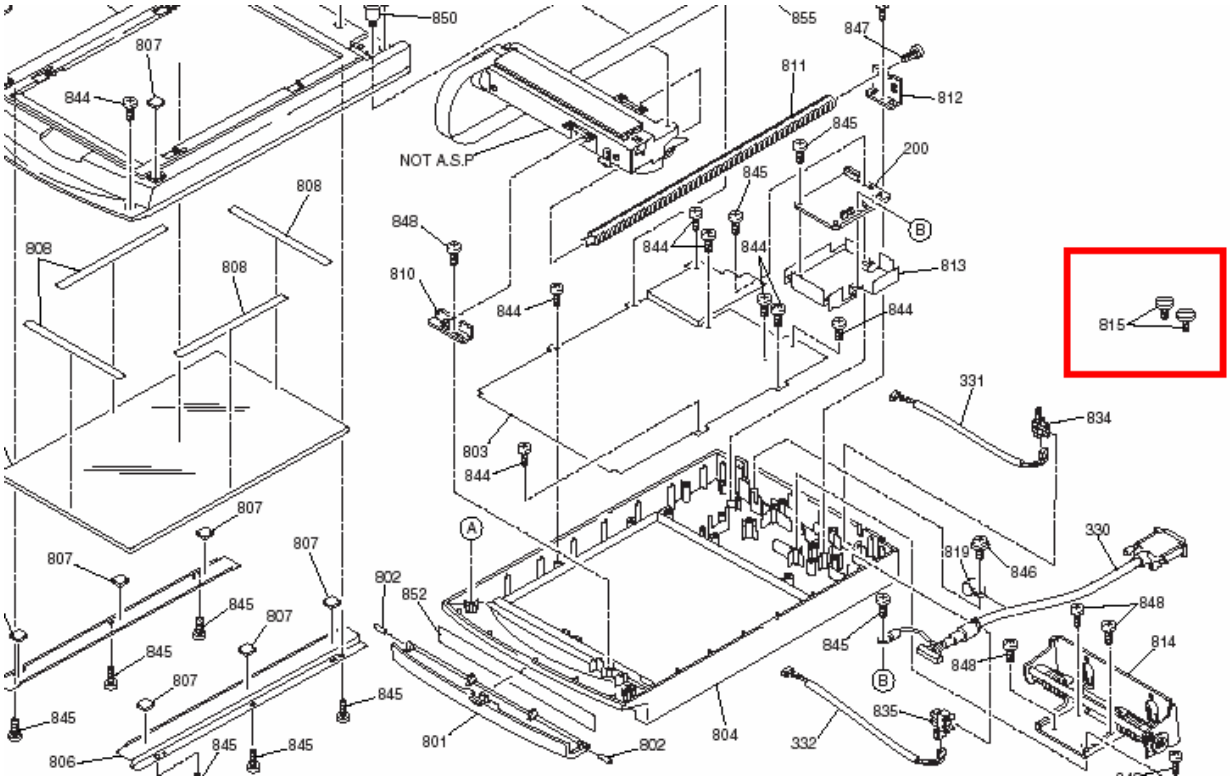

The correct part and reference numbers for the Expression 1600/1680 Transparency Unit (B813182) lock-down thumbscrews are respectively: 1012588 and 815. The Parts Price List (PPL) description is S. THUMB SCREW M4X10 F/NI, Quantity = 2.

Note: The part number is subject to change but the reference number will remain the same.

These screws are used on the following scanners and options: ES-600C/800C/1000C/1200C options (ADF & TPU), and the Expression 636/800/1600/1680 options (ADF & TPU). The part and reference number for Expression 1600/1680 Transparency Unit (B813182) can be used to order replacement thumbscrews for all models and options listed above.

Product Support Bulletin

Subject: OS/2 Warp 3.0 and Epson TWAIN

Date: 1/26/95
Page(s): 1 of 4

PSB No: P-0103A
Originator: CEB

This bulletin describes the necessary steps to implement the Epson TWAIN driver in a Windows 3.1 session under OS/2 Warp 3.0. This procedure will cover both current versions of Epson TWAIN (1.03 and lower as well as 2.02 and higher) using bidirectional parallel and SCSI interfaces.

NOTE:
TWAIN v1.03 and lower will not work with the Epson ES-1200C scanner. You must use TWAIN 2.02 or higher. If you are using the ES-1200C with a program that has Epson scanner support, you may need install the EPSN.SYS device driver for that Windows session. To do this, follow steps 6 through 16 below. You will need to obtain EPSNSY.EXE from the Epson BBS. This file has the EPSN.SYS driver included in it. Simply copy the driver to the root directory of your boot drive.

Bidirectional Parallel Interface

Epson TWAIN v2.xx

There is no special procedure required to setup this version of the driver to run in a Windows session under OS/2 Warp 3.0. Simply launch Windows and install the driver.

Epson TWAIN v1.0x

Follow the steps below to enable Epson TWAIN v1.0x:

1. From the OS/2 desktop, double click on the OS/2 SYSTEM folder
2. Double click on the COMMAND PROMPTS folder
3. Double click on the Win-OS12 icon.
4. Once Windows is loaded, follow the TWAIN installation procedure. When the installation program asks if you wish to make changes to the CONFIG.SYS or the CONFIG.ADD, select CONFIG.ADD.
5. Once the installation has completed, exit Windows.
6. If the COMMAND PROMPTS folder is not open, follow steps 1 and 2.
7. Move the mouse to the WIN-OS/2 FULL SCREEN icon. Click on the right mouse button.

8. Select SETTINGS from the pop-up menu.
9. Once the SETTINGS notebook has opened, click on SESSION.
10. Click on the WIN-OS2 SETTINGS.
11. Click on OTHER DOS SETTINGS.
12. Click on OK.
13. Highlight DOS-DEVICE.
14. In the window to the right, add the EPSN.SYS driver. X represents the appropriate parallel port.
    X = 0 (Parallel port address 3BCh)
    X = 1 (Parallel port address 378h)
    X = 2 (Parallel port address 278h); This is the default setting Epson TWAIN uses.

    The device line would be entered in the following manner. Substitute 0, 1 or 2 based on your configuration.

    C:\EPSN.SYS x /i79

15. Click on SAVE.
16. Close the SETTINGS notebook.

The next time a Win-OS/:! session is started, you will see the EPSON device driver load. If you do not, repeat the above steps. If you have migrated a Windows application to the OS/2 desktop, apply the above steps to that icon instead of the Win-OS/2 icon. To verify that the configuration is correct, configure the DOS FULL SCREEN icon using the same methods outlined in steps 6 through 16. Once you have completed those steps, start a DOS FULL SCREEN session and run the SCANTEST utility from the \WINDOWS\TWAIN directory. If SCANTEST runs successfully, chances are that the Windows session will run properly.

SCSI Interface

In order for either of the Epson TWAIN drivers to function in a Windows session under OS/2, you must install support for your ASPI compliant SCSI card under OS/2 first. For installation instructions, refer to your OS/2 manual.

Once you have installed support for your ASPI compliant card under OS/2, you need to manually check the CONFIG.SYS file for four key files. You should have the following lines in the OS/2 CONFIG.SYS. If these lines do not exist, add them. The AHAxxxx.ADD should have been inserted when you installed the SCSI support for OS/2.

BASEDEV=OS2ASPI.DMD
BASEDEV=OS2SCSI.DMD
BASEDEV=AHAxxxx.ADD /V
DEVICE=C:\OS2\MDOS\VASPI.SYS

NOTE:
This document assumes that you are using an Adaptec card. The AHA1510 and AHA1540C were tested when creating this document.

Once you have verified that the above lines are in the CONFIG.SYS, shut down OS/2 and reboot.

NOTE:
If the SCSI card does not find any devices on the SCSI chain, the AHAxxxx.ADD driver will not load thus causing VASPI.SYS not to load. If this occurs, double check your card's configuration and the SCSI cabling.

Epson TWAIN v1.0x

Follow the steps below to enable Epson TWAIN v1.0x:

1. From the OS/2 desktop, double click on the OS/2 SYSTEM folder
2. Double click on the COMMAND PROMPTS folder
3. Double click on the Win-OS/2 icon.
4. Once Windows is loaded, follow the TWAIN installation procedure. When the installation program asks if you wish to make changes to the CONFIG.SYS or the CONFIG.ADD, select CONFIG.ADD.
5. Once the installation has completed, exit Windows.
6. If the COMMAND PROMPTS folder is not open, follow steps 1 and 2.
7. Move the mouse to the WIN-OS/:! FULL SCREEN icon. Click on the right mouse button.
8. Select SETTINGS from the pop-up menu.
9. Once the SETTINGS notebook has opened, click on SESSION.
10. Click on the WIN-OS2 SETTINGS.
11. Click on OTHER DOS SETTINGS.
12. Click on OK.
13. Highlight DOS-DEVICE.
14. In the window to the right, add the EPSN.SYS driver. X represents the appropriate SCSI ID of the scanner.

    The device line would be entered in the following manner.

    C:\EPSN.SYS 3 /Sx /i79

15. Click on SAVE.
16. Close the SETTINGS notebook.

The next time a Win-OS/2 session is started, you will see the EPSON device driver load. If you do not, repeat the above steps. If you have migrated a Windows application to the OS/2 desktop, apply the above steps to that icon instead of the Win-OS/2 icon. To verify that the configuration is correct, configure the DOS FULL SCREEN icon using the same methods outlined in steps 6 through 16. Once you have completed those steps, start a DOS FULL SCREEN session and run the SCANTEST utility from the \WINDOWS\TWAIN directory. If SCANTEST runs successfully, chances are that the Windows session will run properly.

Epson TWAIN v2.xx

There is no special procedure required to setup this version of the driver to run in a Windows session under OS/2 Warp. Simply launch Windows and install the driver. Follow the procedures outlined in the user's manual. If the driver does not install properly, verify that the device drivers mentioned earlier in this section are being executed.

Product Support Bulletin

Subject: Image Editing Terms

Date: 6/5/91 **PSB No: P-0078**
Page(s): 1 of 3 **Originator: RS**

The following terms' are used to describe image editing and grayscale in connection with scanners, monitors and printers.

Additive Primary Colors:	**The colors produced by mixing colored light. The primary additive colors are red, green and blue. The absence of color produces black (0%); maximum intensity produces white (100%). This principle is used in color monitors (RGB). By using 24 bits per pixel it is possible to represent more than 16 million colors.**
Aliasing:	**The jagged diagonal lines that appear in low resolution mode. Usually noticeable on characters like "A" and "W"!**
Antialiasing :	**The removal of the aliasing or step-like diagonal lines.**
Brightness:	**The balance of light and dark shades.**
Continuous Tone:	**The transition from light to dark or dark to light in a smooth uninterrupted progression. Laser and dot matrix printers do not support continuous tones.**
Contrast:	**The range between the darkest and lightest shades of an image. As contrast increases, the number of gray shades between black and white decreases.**
Cropping:	**An operation that allows portions of an image to be selected. Usually pertains to scanning technology.**
Dithering:	**A method of shading that uses black dots of varying density to represent darker areas. This technology is used in devices that only support black and white outputs.**
DPI:	**Abbreviation for dot per inch. The standard measurement of resolution for all output devices. DPI describes the number of pixels in an image.**

'Some terms taken from PC Publishing, Jan. 1990.

Gamma Function: The function that defines the light intensity ratio between the original image and the output data. The ES-300C scanner allows the function to be altered so that when the image is reproduced on a different type of output device, the tones in the reproduced images will be closer to the original image.

Grayscale: A term used to describe the output of devices that support more than just black and white. Grayscales support up to 256 shades of gray. The table below details the number of data bits required to show the number of possible gray levels.

Number of Bits	Possible Gray Levels
1	2 (black and white)
2	4 grays
3	8 grays
4	16 grays
5	32 grays
6	64 grays
7	128 grays
8	256 grays

Halftone: The output in 1 or 2 bit data format that simulates grayscale by creating a pattern of small dots that vary in size and density. Halftones are used in newspapers to display photographs. The Epson ES-300C supports 3 types of halftoning.

Highlight: The brightest value in a continuous tone or halftone image.

Line Art: Images consisting of only black and white pixels. Text is a good example of line art.

tine Screen: Also known as screen ruling, it is the distance between the centers of halftone dots. For example, a newspaper uses a typical line screen - sixty five halftone dots per inch at a forty five degree angle for photographs.

Matrix: The square grid that forms the halftone dots. As the matrix size increases, more possible variations on dot size and shape are available.

Midtones: The values in a continuous tone or halftone image correspond to the medium values in the range. Generally the values is between 30% to 70%.

Pixel: A relative unit of measuring resolution. Pixel size is relative, due to the output device. For example, a monitor pixel may be different in size compared to a scanner pixel. Pixels can be measured absolutely when fixed to another standard, like pixels per inch.

Posterize: To limit the number of shades in an image to create a highly contrasted effect.

Screen Angle: The angle at which halftone dots are lined up. As mentioned earlier, newspapers commonly use a screen angle of forty five degrees.

Smoothing: An operation that softens the edges between adjacent tones.

Spot Function: A procedural body in the Postscript language that defines the shape of the halftone spot.

Subtractive Primary Colors: Colors that are produced by mixing inks or paints. The three subtractive colors are cyan, magenta, and yellow. This process reduces the amount of light that the human eye receives. The absence of color is white (0%), while full intensity is black (100%). This model is used in printing.

Threshold: The selected gray level above which gray shades are converted to white and below which gray shades are converted to black. This is used to produce higher contrast or posterize images.