EPSON Stylus® Pro 4000

PRINTER GUIDE

EPSON®

All rights reserved. No part of this publication may be reproduced, stored in a retrieval system, or transmitted in any form or by any means, electronic, mechanical, photocopying, recording, or otherwise, without the prior written permission of SEIKO EPSON CORPORATION. The information contained herein is designed only for use with these EPSON printers. EPSON is not responsible for any use of this information as applied to other printers.

Trademarks

EPSON, EPSON Stylus, EPSON ESC/P, and MicroWeave are registered trademarks of SEIKO EPSON CORPORATION.

Photo Enhance and EPSON UltraChrome are trademarks, and EPSON Preferred and EPSON Store are service marks, of Epson America, Inc.

General Notice: Other product names used herein are for identification purposes only and may be trademarks of their respective owners. EPSON disclaims any and all rights in those marks.

The ENERGY STAR emblem does not represent EPA endorsement of any product or service.

Legal Notices

Neither SEIKO EPSON CORPORATION nor its affiliates shall be liable to the purchaser of this product or third parties for damages, losses, costs, or expenses incurred by purchaser or third parties as a result of: accident, misuse, or abuse of this product or unauthorized modifications, repairs, or alterations to this product, or (excluding the U.S.) failure to strictly comply with SEIKO EPSON CORPORATION's operating and maintenance instructions.

SEIKO EPSON CORPORATION shall not be liable for any damages or problems arising from the use of any options or any consumable products other than those designated as Original EPSON Products or EPSON Approved Products by SEIKO EPSON CORPORATION.

Printed on recycled paper.

© 2004 Epson America, Inc. 9/04

CPD-17009R1

FCC Compliance Statement

For United States Users

This equipment has been tested and found to comply with the limits for a Class B digital device, pursuant to Part 15 of the FCC Rules. These limits are designed to provide reasonable protection against harmful interference in a residential installation. This equipment generates, uses, and can radiate radio frequency energy and, if not installed and used in accordance with the instructions, may cause harmful interference to radio or television reception. However, there is no guarantee that interference will not occur in a particular installation. If this equipment does cause interference to radio and television reception, which can be determined by turning the equipment off and on, the user is encouraged to try to correct the interference by one or more of the following measures:

- Reorient or relocate the receiving antenna.
- Increase the separation between the equipment and receiver.
- Connect the equipment into an outlet on a circuit different from that to which the receiver is connected.
- Consult the dealer or an experienced radio/TV technician for help.

WARNING

The connection of a non-shielded equipment interface cable to this equipment will invalidate the FCC Certification of this device and may cause interference levels which exceed the limits established by the FCC for this equipment. It is the responsibility of the user to obtain and use a shielded equipment interface cable with this device. If this equipment has more than one interface connector, do not leave cables connected to unused interfaces. Changes or modifications not expressly approved by the manufacturer could void the user's authority to operate the equipment.

For Canadian Users

This Class B digital apparatus complies with Canadian ICES-003.

Cet appareil numérique de la classe B est conforme à la norme NMB-003 du Canada.

Contents

Introduction 9

Warnings, Cautions, Notes, and Tips 9
Options and Accessories 10
Where To Get Help 11
Macintosh System Requirements 11
Windows System Requirements 12
ENERGY STAR Compliance 13
Important Safety Instructions 13
Ink Cartridge Safety Instructions 15

1 Handling Paper and Other Media 17

Selecting Media for Your Printer 17
Guidelines for Using EPSON Media 18
Using Cut Sheet Paper 18
Cut Sheet Paper Paths 20
Loading Paper in the Paper Tray 21
Using the Front Manual Feed Slot 27
Using the Top Manual Feed Slot 30
Using Roll Paper 31
Roll Paper Guidelines 32
Loading the Paper onto the Spindle 33
Placing the Paper in the Printer 33
Removing Paper from the Spindle 37
Switching Between 2-Inch and 3-Inch Roll Paper 37
Cutting Paper Manually with the Built-in Cutter 38
Printing Trim Lines 39
Adjusting the Platen Gap for Thick or Thin Paper 39
Optimizing the Settings for Your Paper 40
Creating Paper Configurations 41
Selecting Paper Configurations 42

2 Printing with EPSON Drivers for Macintosh 43

Printing in Macintosh OS X 44
- Choosing Page Setup Options 44
- Borderless Printing 46
- Choosing Basic Print Options 47
- Choosing Color Management and Paper Configuration Options . . 50
- Choosing Roll Paper Options 52
- Creating a Custom Preset and Printing 53
- Monitoring Print Jobs 54
- Checking Ink Levels 55
- Sharing Your Printer on a Network 57

Printing in Macintosh OS 9.x 58
- Choosing Page Setup Options for Cut Sheet Printing 58
- Choosing Page Setup Options for Roll Paper and Borderless Printing 59
- Recommended Settings for Borderless Printing 62
- Choosing Basic Print Options 63
- Choosing Advanced Print Options 65
- Managing Print Jobs 68
- Monitoring Your Print Job 69
- Checking Printer Status 70
- Selecting Configuration Options 71
- Sharing Your Printer on a Network 73

3 Printing with EPSON Drivers for Windows 75

Choosing Basic Print Options 76
Choosing Paper and Layout Options 78
- Choosing Cut Sheet Paper Options 78
- Choosing Roll Paper Options 80
- Borderless Printing 82

Choosing Advanced Print Options 83
Managing Print Jobs 87
- Using the Progress Meter 87
- Setting Monitoring Preferences and Optimizing Print Speed 88

Sharing Your Printer on a Network 90

4 Maintaining and Transporting the Printer 93

Checking Printer Status and Part Life 94
Printing Status Information 94
Viewing Status Information 95
Checking and Cleaning the Print Head 96
Running a Power Cleaning Cycle 98
Aligning the Print Head 99
Replacing Ink Cartridges 100
Performing Additional Maintenance Tasks 105
Changing the Date and Time 105
Using the Maintenance Mode 105
Replacing the Paper Cutter Blade 107
Replacing the Maintenance Tank 109
Cleaning the Printer 111
Transporting or Storing the Printer 111
Preparing the Printer for Shipment 112
Setting Up the Printer After Transportation 113
Uninstalling and Reinstalling the Printer Driver 113
Macintosh 113
Windows 114

5 Solving Problems 115

Diagnosing Problems 115
Checking Error Messages and Lights 116
Improving Print Quality 120
Solving Operational Problems 123
Solving Miscellaneous Printing Problems 125
Solving Paper Problems 126
Clearing Roll Paper Jams 127
Clearing Paper Tray Jams 129
Clearing Paper Jams from the Manual Feed Slots 131

A Installing the Optional Print Server Card 133

Removing the Print Server Card 134

B Specifications 135

Printing 135
Environmental 136
Electrical 136
Dimensions 136
    Operating Depth 137
    Weight 137
    Packing Dimensions and Weight 137
Printer Interfaces 137
Safety Approvals 138
Media 138
    Roll Paper 138
    Cut Sheets 138
    Printable Area 139
Ink Cartridges 139

Index 141

Introduction

This *Printer Guide* provides important information on using your printer, selecting paper, and replacing ink cartridges. It also tells you how to maintain your printer to keep it working at its best, and provides troubleshooting tips in case you have a problem.

For additional information, see the following:

- The *Start Here* sheet shows how to set up your printer and install the software.
- The video CD-ROM, *Mastering Your Printer,* offers expert advice on printing from Adobe® Photoshop,® optimizing print quality, and performing basic operations.
- The *Quick Reference Guide* provides a handy summary of procedures for daily use and printer maintenance—loading paper, replacing ink cartridges and other components, checking and aligning the print head, and understanding error messages. Attach it to your printer for easy reference.
- The electronic *Reference Guide* on the CD-ROM provides additional information about the printer, drivers, and utility software. You can read the guide using a web browser, such as Netscape® Navigator® or Microsoft® Internet Explorer, versions 4.0 or later.

Warnings, Cautions, Notes, and Tips

These symbols are used in this book:

WARNINGS must be followed carefully to avoid bodily injury.

Cautions must be observed to avoid damage to your equipment.

Notes contain important information about your printer.

Tips contain additional hints on how to get the most out of your printer.

Tip: Check the EPSON Pro Graphics web site at http://prographics.epson.com for new accessories and options that may become available.

Options and Accessories

Your EPSON Stylus® Pro 4000 offers these optional upgrades and accessories:

Optional equipment and software

Option	Part number
EPSON Stylus Pro 4000 Printer Cabinet Stand	C4000STAND
Internal 10/100 BaseTX (Ethernet™) Type-B Print Server (interface card)*	C12C824052
Paper Roller Spindle (Normal Tension) — 2- or 3-inch	C12C811171
Paper Roller Spindle (High Tension) — 2- or 3-inch	C12C811191
One- and two-year extended warranties	EPP40EX1 (1-year) EPP40EX2 (2-year)

* See Appendix A for details.

In addition, you can order these user-replaceable items:

Consumables and user-replaceable parts

Part	Part number
Replacement Ink Maintenance Tank*	C12C890071
Replacement Printer Cutter Blade**	C12C815291
Ink Cartridges	See page 102 for a complete listing.
Paper (roll and sheet)	See pages 19 and 31 for complete listings.

* See page 109 for details.

** Replaces the blade for the printer's built-in cutter (see page 107).

You can purchase optional equipment and software, ink cartridges, paper, and manuals from EPSON® at (800) 873-7766, or you can visit the EPSON Store℠ at www.epsonstore.com (U.S. sales only). In Canada, please call (800) 463-7766 for dealer referral.

Check the EPSON Pro Graphics web site at http://prographics.epson.com for new accessories and options that may become available.

Where To Get Help

Tip: If you experience difficulty with the toll-free line or your Unit ID number, call (562) 276-1305.

EPSON provides technical support and information on the installation, configuration, and operation of professional printing products through the EPSON Preferred℠ Protection Plan. Dial (888) 377-6611, 6 AM to 6 PM, Pacific Time, Monday through Friday. Support hours and days are subject to change without notice.

Before you call, make sure you have your Unit ID number, which is included with the EPSON Preferred Protection Plan information that came with your printer. You'll also need your printer serial number and proof of purchase.

EPSON also provides technical assistance 24 hours a day through the World Wide Web. You can reach EPSON Support at http://support.epson.com. At this site, you can download drivers and other files, look at product documentation, access troubleshooting information, and receive technical advice through e-mail.

You can purchase ink cartridges, paper, and accessories from EPSON at (800) 873-7766, or by visiting the EPSON Store at www.epsonstore.com (U.S. sales only). In Canada, please call (800) 463-7766 for dealer referral.

Macintosh System Requirements

To use your printer in either a stand-alone or peer-to-peer network environment, your Macintosh® system should include the requirements listed below:

- OS 9.2.2 or OS X 10.2.8 or later
- 1.0 GHz or higher processor recommended
- At least 512MB of RAM
- At least 60MB of free hard disk space to install the software, and at least 2GB of free hard disk space for processing files (8GB or more available hard disk space recommended)
- Quad-speed (4×) or faster CD-ROM or DVD drive for installing the printer software

Caution: Using an improperly shielded cable—especially a cable more than 10 feet long—may cause the printer to malfunction.

- For USB connection: a compliant USB port and a shielded USB "AB" cable from Series A (computer) to Series B (printer), up to 10 feet long

  For IEEE 1394 (FireWire®) connection: a shielded IEEE 1394 cable up to 10 feet long

  For network connection: the optional Ethernet card (described on page 10) and a compatible cable

Windows System Requirements

To use your printer in either a stand-alone or peer-to-peer network environment, your system should include the requirements listed below:

- IBM®-compatible PC with a Pentium® IV 1 GHz or higher processor recommended
- For USB connection: PC with USB port running Windows® 98 SE (factory installed), Me, 2000, or XP

  For IEEE 1394 connection: PC with FireWire port running Windows Me, 2000, or XP

  For 10/100 Base TX Ethernet connection: Ethernet equipped PC running Windows 98, Me, NT 4.0, 2000, or XP
- At least 512MB of RAM
- At least 100MB of free hard disk space to install the software, and at least 2GB of free hard disk space for processing files (8GB or more available hard disk space recommended)
- Quad-speed (4×) CD-ROM or DVD drive for installing the printer software
- For USB connection: a Windows-compliant USB port and a shielded USB "AB" cable from Series A (computer) to Series B (printer), up to 10 feet long

  For IEEE 1394 (FireWire) connection: the optional IEEE 1394 port (described on page 10) and a shielded IEEE 1394 cable up to 10 feet long

  For network connection: the optional Ethernet interface card (described on page 10) and a compatible cable

ENERGY STAR Compliance

As an ENERGY STAR Partner, EPSON has determined that this product meets the ENERGY STAR guidelines for energy efficiency.

The EPA ENERGY STAR Office Equipment program is a voluntary partnership with the computer and office equipment industry to promote the introduction of energy-efficient personal computers, monitors, printers, fax machines, and copiers in an effort to reduce air pollution caused by power generation.

Important Safety Instructions

Before using your printer, read the following safety instructions to make sure you use the equipment safely and effectively.

- The printer weighs about 85 lb (without ink or paper), and should be lifted by two people.
- When setting up the printer, make sure you have enough space around it, as shown below. You may need more space behind the printer if you print on large sheets of heavy stock or posterboard.

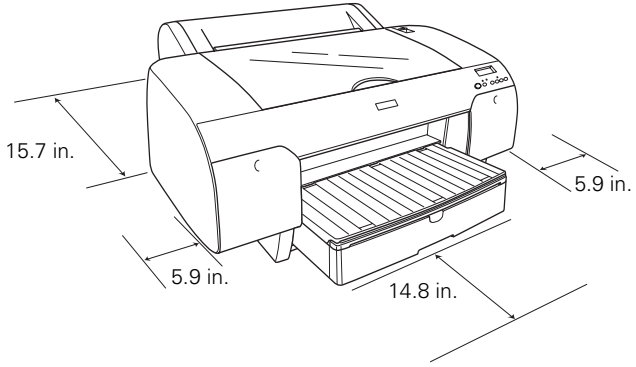

- Do not place the printer on an unstable surface or near a radiator or heating vent. Avoid areas subject to rapid changes in temperature and humidity or shock and vibrations.
- Do not place the printer near a window or in direct sunlight. Bright light can interfere with the paper sensors, causing paper jams and related problems.

- Do not store paper or other material on top of the printer. Doing so can interfere with the paper sensors.
- Keep the entire system away from potential sources of electromagnetic interference, such as loudspeakers or the base units of cordless telephones.
- Place the printer on a flat surface. It will not operate properly if it is tilted or at an angle.
- If you use a stand, make sure it can support at least 110.3 lb (50 kg)
- Do not block or cover the openings in the printer case or insert objects through the slots.
- Use only the type of power source indicated on the label.
- Connect all equipment to properly grounded power outlets. Avoid using outlets on the same circuit as photocopiers or air control systems that regularly switch on and off. Do not use outlets controlled by wall switches or timers.
- Place the printer near a wall outlet where the plugs can be easily unplugged.

  Placez l'imprimante près d'une prise de contacte où la fiche peut être débranchée facilement.
- Do not let the power cords become damaged or frayed.
- If you use an extension cord with the printer, make sure the total ampere rating of the devices plugged into the extension cord does not exceed the cord's ampere rating. Also, make sure the total ampere rating of all devices plugged into the wall outlet does not exceed the wall outlet's ampere rating.
- Turn off and unplug the printer before cleaning. Clean with a damp cloth only. Do not spill liquid on the printer.
- Except as specifically explained in the documentation, do not attempt to service the printer yourself. Opening or removing those covers that are marked "Do Not Remove" may expose you to dangerous voltage points or other risks. Refer all servicing in those compartments to service personnel.

Caution: Always turn the printer off using the ⏻ power button. When you press this button, POWER OFF appears on the LCD panel. Do not unplug the printer or turn off the power to the printer until the panel shuts off. This ensures that the print head is safely capped.

- Power down the printer from the control panel, unplug the printer, and refer servicing to qualified service personnel under the following conditions:

  If the power cord or plug is damaged; if liquid has entered the printer; if the equipment has been dropped or the case damaged; if the printer does not operate normally or exhibits a distinct change in performance. Adjust only those controls that are covered by the operating instructions.

Ink Cartridge Safety Instructions

- Do not put your hand inside the printer or touch the cartridges during printing.
- To avoid damaging the printer, do not move the print head by hand.
- Under normal circumstances, ink will not come out of the cartridge. If it does get on your skin, wash it off with soap and water. If it gets in your eyes, flush them immediately with water.
- Keep ink cartridges out of the reach of children and do not drink the ink.
- Do not store ink cartridges at high or freezing temperatures. Keep cartridges away from direct sunlight. Store cartridges in a cool, dark location.
- Do not dismantle the ink cartridges or try to refill them. This could result in damage to the print head.
- Do not touch the ink supply port or surrounding area, or the green IC chip on the side of the cartridge. This may affect normal operation and printing.

Chapter 1: Handling Paper and Other Media

The EPSON Stylus Pro 4000 prints on a variety of media, including roll paper and cut sheets up to 17 inches wide. You can also use heavy stock, such as posterboard up to 59 mil (1.5 mm) thick, via the straight-through paper path.

This chapter includes the following information:

- Selecting media for your printer
- Printing on EPSON media
- Using cut sheet paper
- Using roll paper
- Loading paper manually
- Optimizing the settings for your paper

Selecting Media for Your Printer

Note: You can purchase additional roll paper spindles and other accessories or options from the EPSON Pro Graphics web site (http://prographics.epson.com) or your authorized EPSON dealer.

You can print on most types of coated, glossy, plain paper, and other media. An optional high-tension spindle is also available for printing on certain roll media such as EPSON UltraSmooth Fine Art Paper and Textured Fine Art Paper. The spindle applies tension to keep the paper tightly wound.

The following table shows the paper sizes you can use:

Supported paper sizes

	Roll paper	Cut sheets
Size	8 to 17 in. wide (203 to 432 mm)	8 × 10 in. up to 17 × 22 in.
Maximum external roll diameter	2 in. core: 4 in. (103 mm) 3 in. core: 6 in. (150 mm)	—
Thickness	3.15 to 19.7 mil (0.8 to 0.5 mm)	3.15 to 59 mil (0.8 to 1.5 mm)

Always test samples of paper stock in the printer before purchasing large quantities or printing large jobs. When you use non-EPSON paper or other media, you may need to adjust various settings and create special paper configurations. See page 41 for instructions.

Guidelines for Using EPSON Media

Follow these guidelines, as well as those included in your paper package, when printing on EPSON paper and other media:

- Avoid touching the printable surface with your bare hands. Fingerprints may affect print quality. Handle media by the edges or use cotton gloves.
- Always choose the correct Media Type setting in your printer driver software before you send your job. See page 48 (Mac OS X), page 63 (Mac OS 9), or page 76 (Windows) for instructions.
- Always select the correct paper source (roll or sheet) in both the printer driver software and on the printer's control panel. See page 45 (Mac OS X), page 58 (Mac OS 9), or page 78 (Windows) for instructions on selecting the paper source in your printer software.
- Keep unused media in its original packaging and store it in a cool, dry place to maintain quality. Avoid storing your printouts where they will be exposed to high temperature, humidity, or direct sunlight.

Using Cut Sheet Paper

You can print on many types of cut sheet paper and other media. The EPSON Stylus Pro 4000 accepts sheets ranging from 8 × 10 inches to 17× 22 inches.

Follow these additional guidelines for cut sheet paper:

- You can leave your roll paper on the spindle when you print on cut sheets; make sure it is removed from the paper path and rolled up.
- Store sheet media on a flat surface in its original package.
- If you need to add paper to the tray, first remove all the paper and then add to the stack that you removed.
- Use the 250 Media Type setting for 17" × 22" sheets.
- If you're using fine art paper or other thick media, you need to load it manually, as described on page 27.

Note: Check the EPSON Pro Graphics web site (http://prographics.epson.com) or your authorized EPSON dealer for other media that may be available.

EPSON papers, which are specially designed for the inks used in the printer, ensure high-quality results. The following table lists the product codes for the EPSON cut sheet media available for your printer.

EPSON cut sheet media

Paper type	Weight	Thickness	Size	Code
Photo Quality Ink Jet Paper	28 lb	4.9 mil	8.5" × 11"	S041062
			8.3" × 11.7"	S041061
			11" × 17"	S041070
			13" × 19"	S041069
			16.5" × 23.4"	S041079
			17" × 22"	S041171
Premium Glossy Photo Paper (Load in top manual slot only.)		10.4 mil	8.5" × 11"	S041286
			11" × 17"	S041290
			11.7" × 16.5"	S041288
			13" × 19"	S041289
Premium Luster Photo Paper	240 gsm	10 mil	8.5" × 11"	S041405
			11.7" × 16.5"	S041406
			13" × 19"	S041407
Premium Semigloss Photo Paper		10.4 mil	8.5" × 11"	S041331
			13" × 19"	S041327
Enhanced Matte Paper	192 gsm	10 mil	8.5" × 11"	S041341
			11.7" × 16.5"	S041343
			13" × 19"	S041339
Proofing Paper Commercial Semimatte	155 gsm	6.5 mil	13" × 19"	S041744
Watercolor Paper - Radiant White	190 gsm	11.5 mil	13" × 19"	S041351
Velvet Fine Art Paper (Load in top manual slot only.)	260 gsm	19 mil	8.5" × 11"	S041636
			13" × 19"	S041637
UltraSmooth Fine Art Paper* (Load in front manual slot only.)	325 gsm	21 mil	13" × 19"	SP91209
			17" × 22"	SP91210

* Choose the **Watercolor Paper - Radiant White** Media Type setting.

Cut Sheet Paper Paths

In addition to the paper tray, two paper paths are available for manual feeding of special media. Make sure you use the correct paper path for EPSON media, as listed below:

Paper tray

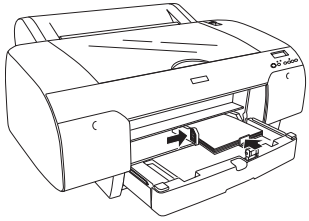

- Premium Semigloss Photo Paper
- Premium Luster Photo Paper
- Photo Quality Ink Jet Paper
- Proofing Paper Semimatte
- Enhanced Matte Paper
- Watercolor Paper - Radiant White
- Plain Paper

Top manual feed slot

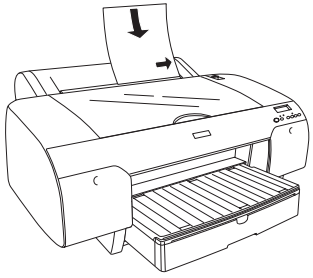

- Premium Glossy Photo Paper
- Premium Semigloss Photo Paper
- Premium Luster Photo Paper
- Photo Quality Ink Jet Paper
- Proofing Paper Semimatte
- Enhanced Matte Paper
- Watercolor Paper - Radiant White
- Velevet Fine Art Paper
- Plain Paper

Front manual feed slot

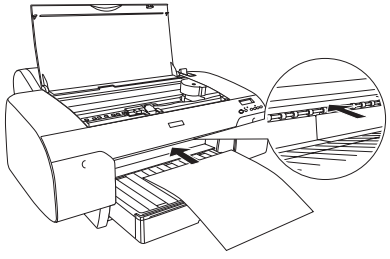

- Smooth Fine Art Paper
- Textured Fine Art Paper
- Enhanced Poster Board

Loading Paper in the Paper Tray

You can load up to 250 sheets of plain paper in the tray. The following table lists the paper tray capacity for various types and sizes of EPSON paper:

EPSON cut sheet paper capacity

Paper type	Size	Loading capacity
Photo Quality Ink Jet Paper	8.5" × 11"	200
	11" × 17" 13" × 19"	100
	17" × 22"	50
Premium Semigloss Photo Paper	8.5" × 11"	100
	13" × 19"	50
Premium Luster Photo Paper	8.5" × 11"	100
	11.7" × 16.5" 13" × 19"	50
Enhanced Matte Paper	8.5" × 11"	100
	11.7" × 16.5" 13" × 19"	50
Proofing Paper Commercial Semimatte	13" × 19"	50
Watercolor Paper - Radiant White	13" × 19"	20

Follow these steps to load cut sheets in the paper tray:

1. Make sure the printer is turned on, then press the < Paper Source button until the sheet icon appears on the LCD display.

2. Extend the paper tray and paper tray cover.

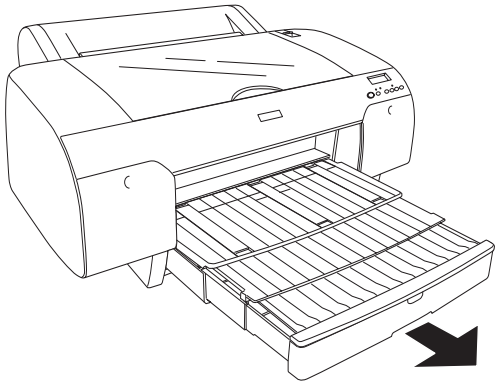

3. Lift up the paper tray cover.

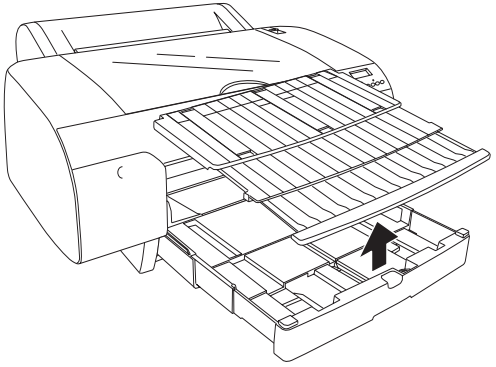

4. Flip up the paper guide roller and slide the edge guide all the way to the left.

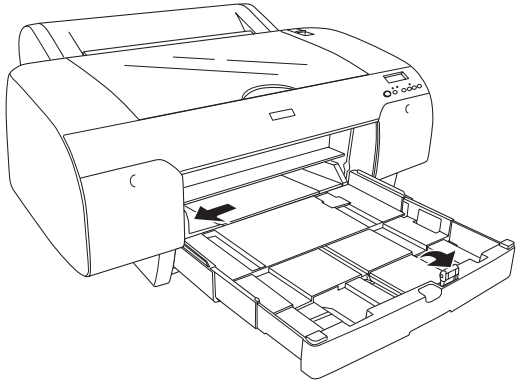

5. Clean the inside of the paper tray to remove any dust. Dust may affect printout quality.

6. Thumb through a stack of paper, then gently tap it on a flat surface to even the edges.

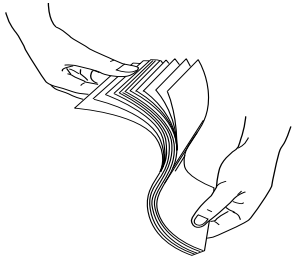

Note: When you need to add sheets, first remove all the paper and then add to the stack that you removed.

7. Load the sheets with the printable side down, in the portrait orientation (short edge first). Place the paper all the way back in the paper tray and next to the right edge.

   Make sure the stack of paper fits under the arrow on the left edge guide.

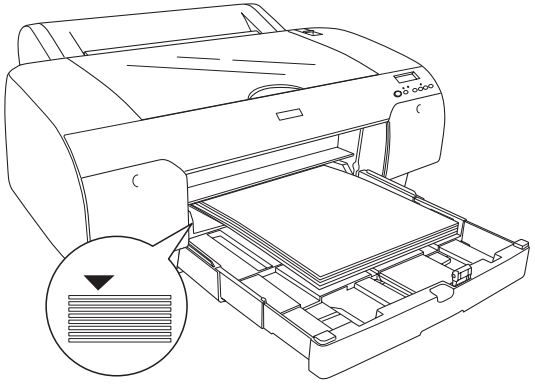

8. Adjust the edge guide and length of the paper tray.

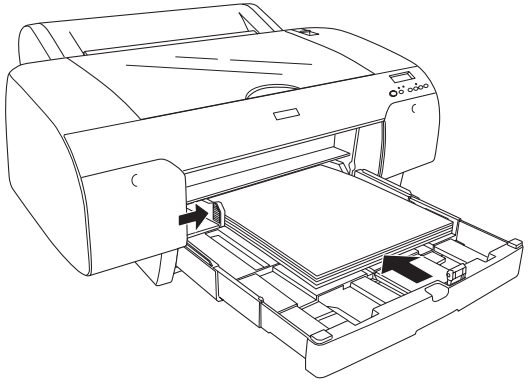

If you're printing on letter size paper, raise the paper guide and push it against the end of the paper stack.

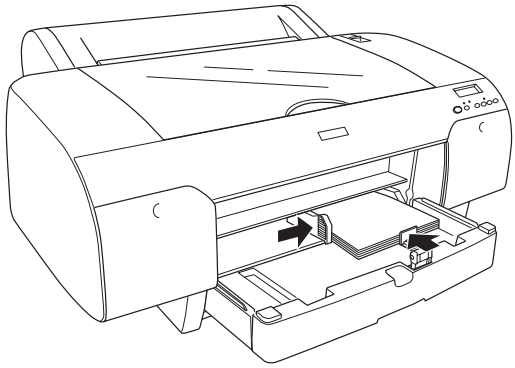

9. Flip the paper guide roller down onto the stack of paper.

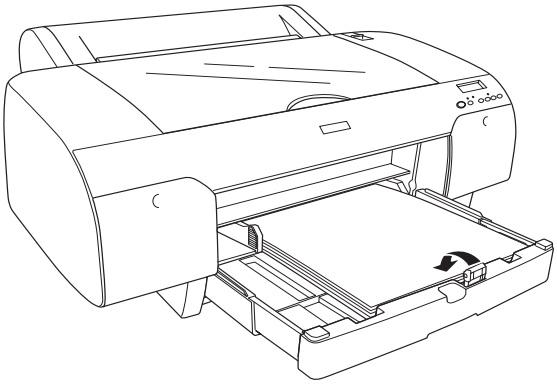

Note: Make sure the roll paper support on the paper tray cover is not raised.

10. Replace the paper tray cover and adjust its length.

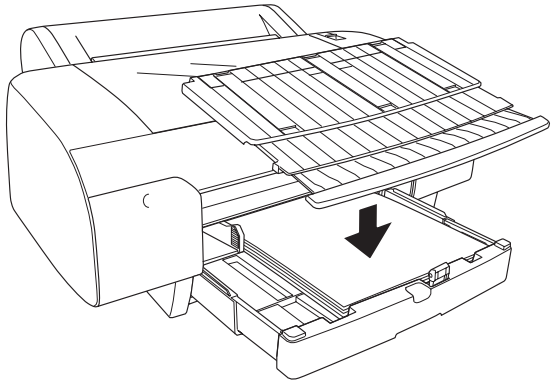

11. Extend the paper tray cover if necessary to support your printouts.

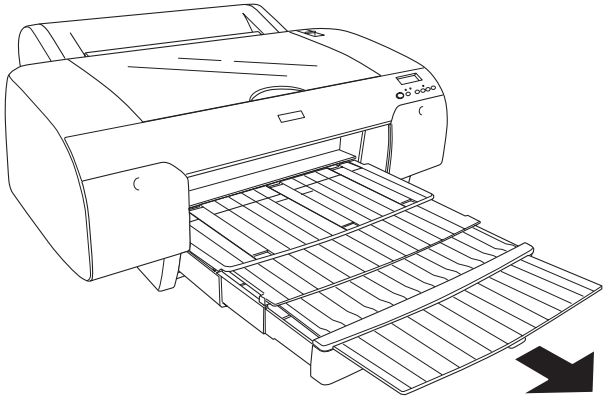

Using the Front Manual Feed Slot

If you want to print on fine art paper, posterboard, or other media 19 to 59 mil (0.5 to 1.5 mm) thick, you need to use the manual feed slot. This provides a straight-through paper path. Be sure to allow enough room behind the printer so the paper is not bent when it feeds into printing position.

1. Make sure the printer is turned on, then press the < Paper Source button until the ▯ sheet icon appears on the LCD display.

2. Release the paper lever.

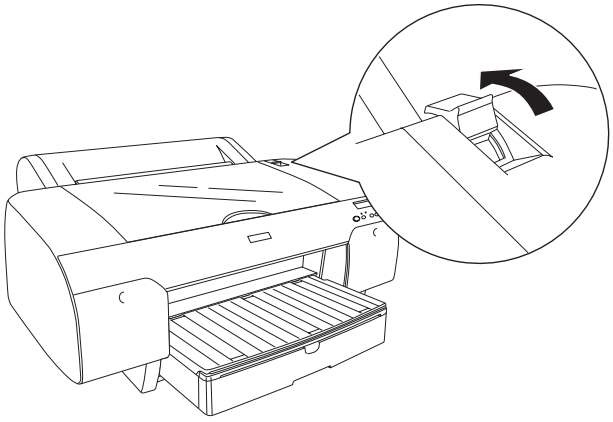

3. Open the top cover.

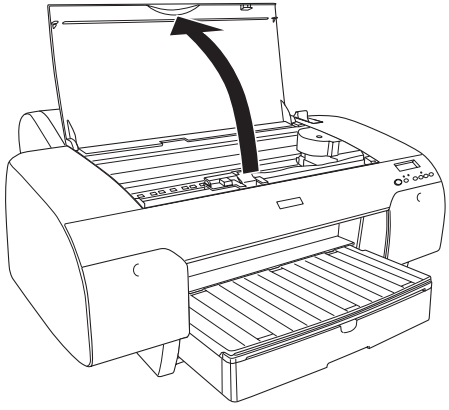

4. Insert the sheet face-up.

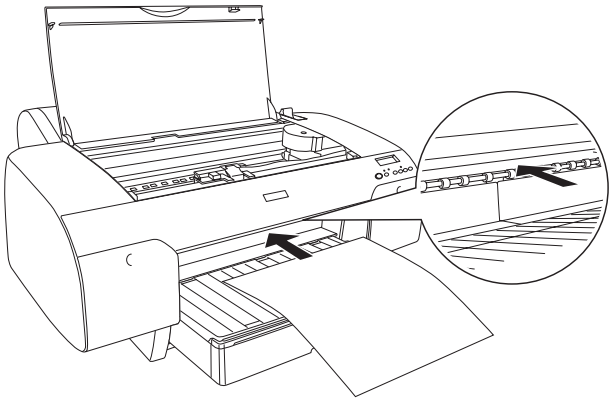

5. Push the sheet under the gray feed rollers.

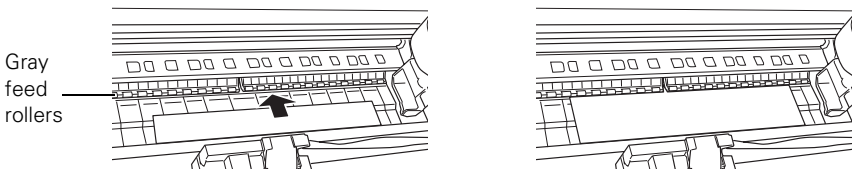

6. Align the edge of the paper with the OTHER mark on the paper tray cover. For longer sheets, make sure you align the right edge of the sheet with the vertical mark on the tray cover, next to the arrow.

   Then close the top cover.

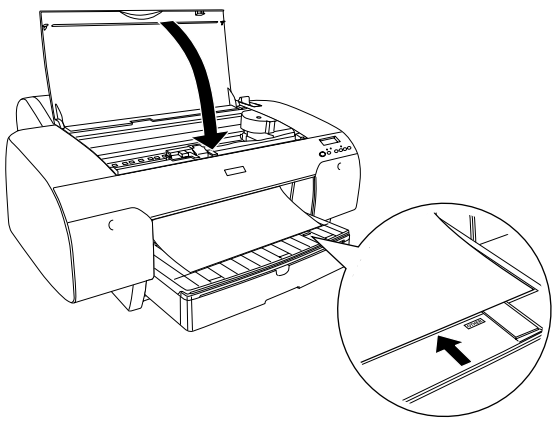

7. Return the paper lever to the secured position. The printer automatically feeds the paper into printing position.

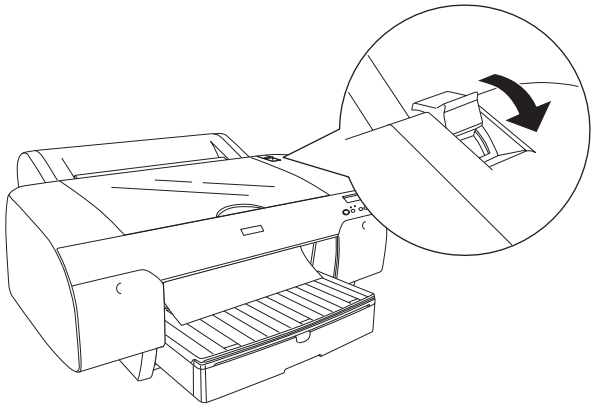

8. Extend the paper tray and cover if necessary to support the sheet as it comes out of the printer. Make sure the roll paper support is not raised.

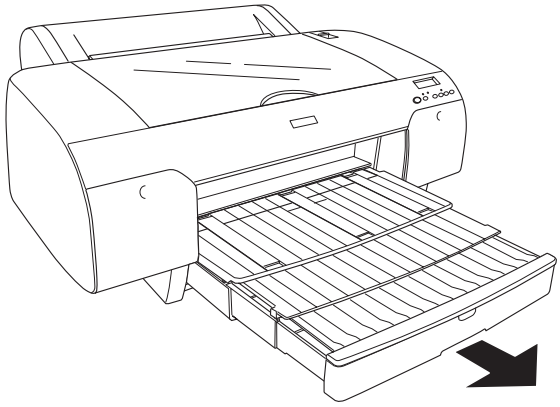

Using the Top Manual Feed Slot

You must use the top manual feed slot for EPSON Premium Glossy Photo Paper and Velvet Fine Art Paper. You can also use this feed slot for other types of paper, as listed on page 20.

1. Make sure the printer is turned on, then press the < Paper Source button until the sheet icon appears on the LCD display.

2. Align the sheet with the right edge of the slot and insert it until it meets resistance.

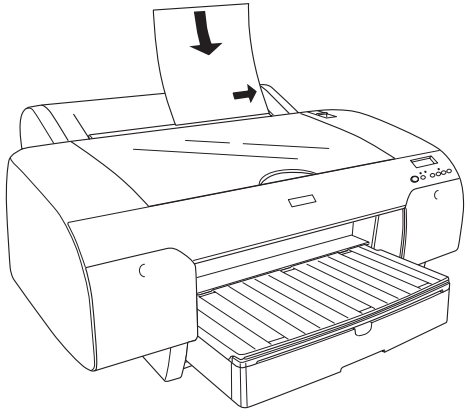

   The printer automatically feeds the sheet into printing position.

3. Extend the paper tray and cover if necessary to support the sheet as it comes out of the printer. Make sure the roll paper support is not raised.

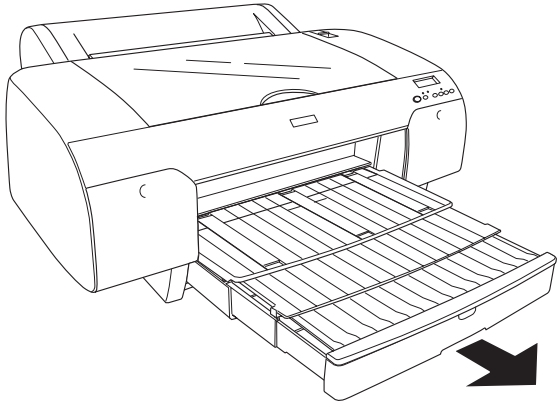

Note: Check the EPSON Pro Graphics web site (http://prographics.epson.com) or your authorized EPSON dealer for other media that may be available.

Using Roll Paper

You can use any roll paper with a 2- or 3-inch core, up to 17 inches wide. Manually switching from one paper roll to another is a simple process.

Following is a list of the product codes for EPSON roll media available for the printer. Unless otherwise noted, these media have a 3-inch core and require the optional high-tension spindle.

EPSON roll media

Paper type	Weight	Thickness	Size	Code
Premium Glossy Photo Paper (250) (3" core, regular spindle)	260 gsm	10 mil	8.3" × 32'	S041376
			13" × 32'	S041378
			16" × 100'	S041742
Premium Luster Photo Paper (250)	240 gsm	10 mil	8.3" × 32'	S041408
			10" × 100'	S041644
			16" × 100'	S041737
Premium Semimatte Photo Paper (250)	235 gsm	10 mil	16" × 100'	S041738
SingleWeight Matte Paper (2" core, regular spindle)	120 gsm	5.5 mil	17" × 132'	S041746
Enhanced Matte Paper	192 gsm	10.3 mil	17" × 100'	S041725
EPSON Proofing Paper Commercial Semimatte, (2" core, regular spindle)	155 gsm	6.5 mil	13" × 50'	S041668
			17" × 100'	S041724
UltraSmooth Fine Art Paper (250 gsm) *	250 gsm	15 mil (Do not use cutter.)	17" × 7'	S041782-S
			17" × 50'	SP91205
Textured Fine Art Paper	225 gsm	15 mil (Do not use cutter.)	17" × 50'	S041745
PremierArt™ Water Resistant Canvas for Epson, (2" core, regular spindle)*	350 gsm	19 mil (Do not use cutter.)	13" × 20'	SP91220
			17" × 10'	SP91221-S
			17" × 40'	SP91221

* Choose the **Watercolor Paper - Radiant White** Media Type setting.

Roll Paper Guidelines

When printing on roll paper, be sure to follow the media handling guidelines on page 18, as well as these special guidelines for roll paper:

- When storing roll paper, keep it in its original packaging—including the bag, end caps, and box.
- To avoid feeding excess paper, make sure the Sheet icon does not appear on the LCD display. Press the < Paper Source button until the or roll icon appears on the LCD display.
- Choose if you want the paper to be cut automatically after each page is printed.
- Choose if you're printing on canvas or other heavy media. Media that is too thick will damage the cutter. Use of a rotary paper cutter/trimmer is recommended.

  Also choose this setting if you want to print a series of pages and keep them together for cutting later on. The following media (and other similar materials) do not work with the built-in cutter:

  - Fine art paper (including EPSON Textured and UltraSmooth Fine Art Paper)
  - PremierArt Water Resistant Canvas for Epson
  - Vinyl
  - Matte board
  - Backlight film
  - Heavyweight polyester banner media
  - DuPont™ Semigloss Proofing Paper
- If you're loading heavy paper, you may need to increase the suction strength by pressing the paper feed ^ button. This helps hold the paper in place during loading and printing.

  For lightweight paper, decrease the suction by pressing the v button.

  Release the paper lever to view the suction setting.

Note: The spindle accommodates both 2-inch and 3-inch roll paper cores. To switch between different size cores, see page 37.

Loading the Paper onto the Spindle

Follow these steps to attach the roll to the spindle:

1. Slide the black paper stop (flange) off the left end of the spindle.

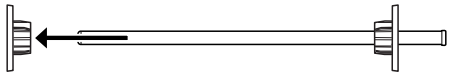

Note: Avoid touching the printable surface of the paper as much as possible. Oils from your skin can affect print quality.

2. Position the roll so the paper unwinds as shown, then slide it onto the spindle:

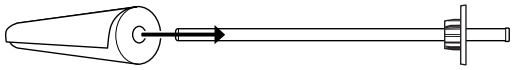

3. Slide the movable paper stop back onto the spindle and insert it into the end of the roll. Make sure it is firmly fixed into the left end of the paper roll.

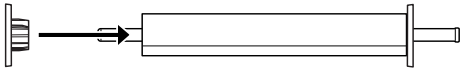

Placing the Paper in the Printer

Follow these steps to place the paper in the printer:

1. Open the roll paper cover.

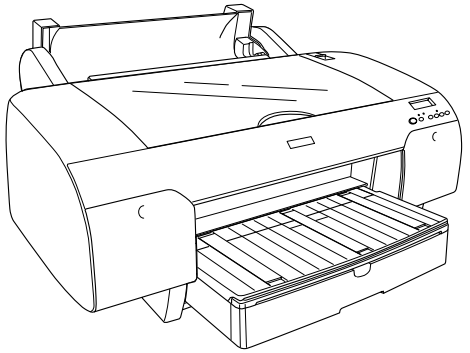

2. Place the roll paper in the printer as shown. (The gray end of the spindle goes on the right.)

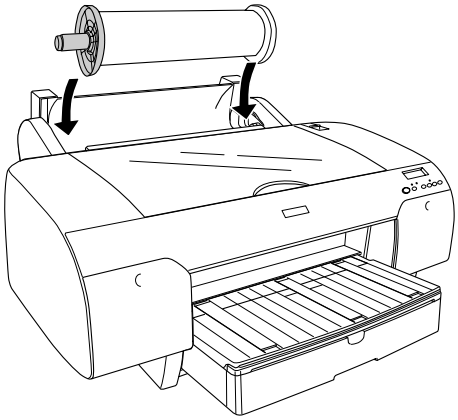

Note: To avoid feeding excess paper, make sure you don't select when you're using roll paper.

3. Make sure the printer is turned on, then press the < Paper Source button until the or icon appears on the LCD display.

4. Release the paper lever.

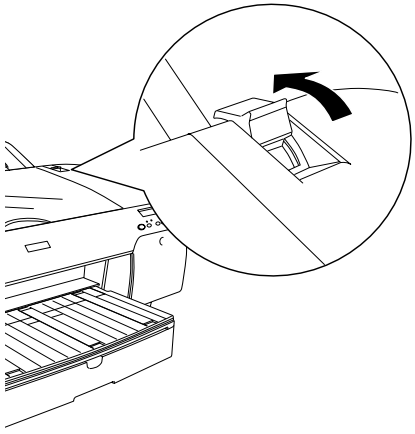

5. Hold both sides of the paper and feed into the slot.

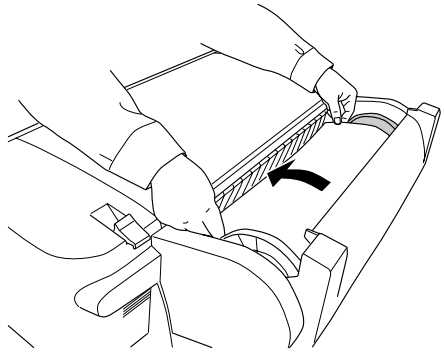

6. Feed the paper all the way through the printer until it is aligned with the OTHER mark on the paper tray cover.

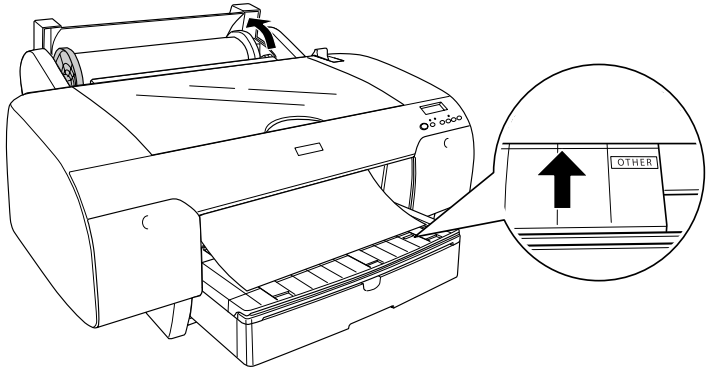

7. Move the paper lever to the secured position. The printer automatically positions the paper for printing.

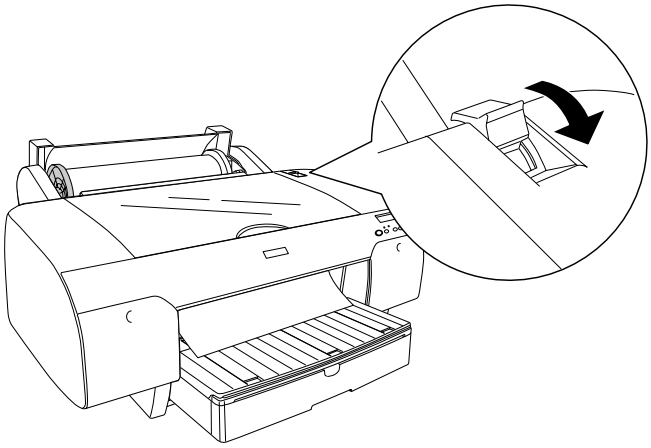

8. Raise the roll paper support. Make sure the paper is on top of the guides.

Note: The maximum length of roll paper you can print on is limited by the printer driver, and may also be limited by your application software and/or operating system.

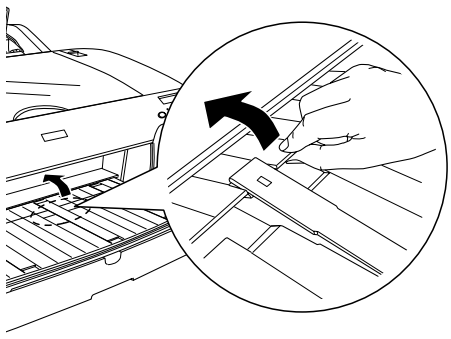

9. Close the roll paper cover.

To avoid indenting or creasing the paper, remove it from the paper path and roll it up when you are not printing.

Removing Paper from the Spindle

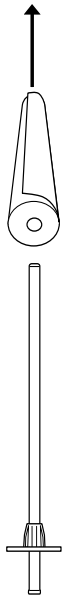

If you need to remove the paper roll from the spindle, follow these steps:

1. Open the roll paper cover.
2. If the paper is loaded for printing, push the paper lever back to the released position, then roll up the paper before removing it.
3. Remove the roll paper and spindle from the printer.
4. Set the spindle upright, with the gray end on the floor and the black end at the top.
5. Slide the black paper stop off the top of the spindle.
6. Remove the roll paper from the spindle.

Switching Between 2-Inch and 3-Inch Roll Paper

You can convert the spindle to accept roll paper with either a 2-inch or 3-inch core by using the spindle adapters. Follow these steps to attach the adapters for using 3-inch roll paper:

1. Remove the black paper stop from the end of the spindle.
2. Align the arrow marks as shown below and press one of the adapters on to the gray paper stop until it locks in place. Press the other adapter onto the black paper stop.

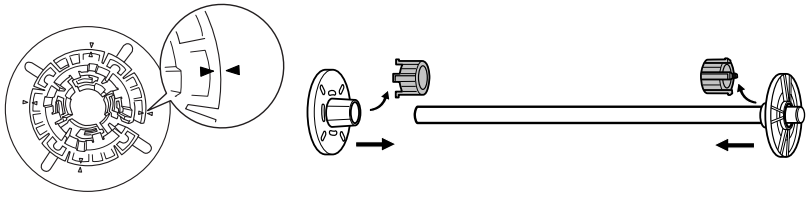

3. To remove the adapters, press on the four tabs.

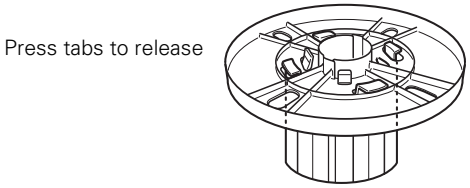

Cutting Paper Manually with the Built-in Cutter

When you're not using the auto cut setting, you need to cut the paper manually by pressing the button after your print job is finished. You can use the button for most types of paper. However, if you're printing on fine art paper, canvas, or other heavy media, you should use a rotary paper cutter/trimmer or scissors rather than the built-in cutter. See page 32 for a list of media that cannot be used with the built-in cutter.

Follow these steps to cut manually with the built-in cutter:

1. Before you print, press the < Paper Source button until you see the icon.

2. Run your print job.

3. If the paper is not positioned correctly, press the ∨ or ∧ button to match the cutting position on the paper with the cutting position on the left side of the print head.

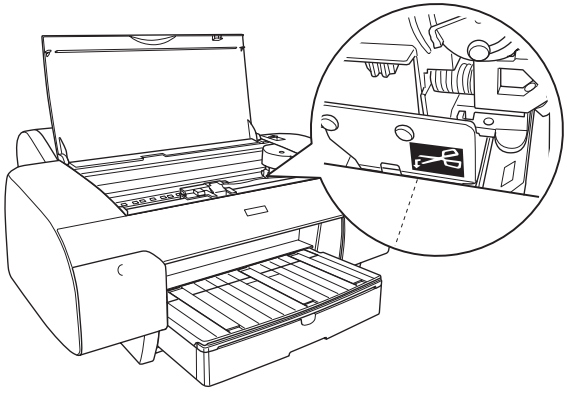

4. Press the < button until you see the auto cut icon on the LCD.

5. Press and hold the < button for 3 seconds. The paper is cut.

Printing Trim Lines

You can print trim lines on the right edge of your pages (if you're using auto cut) or on the right and bottom edge (if you're not using auto cut). Follow these steps:

1. Press the Menu button. Printer Setup appears on the display.

2. Press the Menu button again to select the Printer Setup menu and display PLATEN GAP.

3. Press the > button to display PAGE LINE.

4. Press the Menu button. OFF is displayed as the current setting.

5. Press the > button so that ON appears.

6. Press the Menu button to save the setting. An asterisk appears next to ON.

7. Press the Pause button to exit the menu.

You can also specify trim lines from your printer driver software. For instructions, see page 53 (Mac OS X), page 61 (Mac OS 9), or page 82 (Windows).

Adjusting the Platen Gap for Thick or Thin Paper

When you print on unusually thick or thin paper, you may need to adjust the platen gap setting. Normally, the STANDARD setting allows the printer to adjust automatically. However, if print quality is not satisfactory when using very thin or very thick stock, you may need to change this setting. Follow these steps:

1. Press the Menu button. Printer Setup appears on the display.

2. Press the Menu button again to select the Printer Setup menu and display PLATEN GAP.

Caution: To avoid damaging the printer, make sure you do not select the Narrow setting when you print on heavy media.

3. Press the Menu >↵ button. STANDARD is displayed as the current setting.
4. Use the ∨ and ∧ buttons to change the setting. (STANDARD is the default setting; you can also choose NARROW, WIDE, or WIDER.)
5. Press the Menu >↵ button to save the setting. An asterisk appears next to the selected setting.
6. Press the ❚❚ Pause button to exit the menu.

If you've selected a non-standard platen gap, the letter N or W appears in the corner of the display to remind you of the narrow or wide setting. When you switch media, don't forget to change the setting back to STANDARD.

If you're printing on non-EPSON media, you may also need to create a paper configuration to optimize your results. See the following section for more information.

Optimizing the Settings for Your Paper

When you choose a media type in your EPSON printer software, the driver automatically determines the best settings for your paper. However, you may want to fine-tune how the printer handles various media—especially if you use non-EPSON paper or a paper not supported by the driver. Use the paper configuration settings described below. If you're printing on unusually thick or thin paper, you may also need to adjust the platen gap; if so, you should do that first (see page 39).

Note: It's a good idea to keep a list describing your paper configurations.

You can create a special configuration, or group of settings, for each paper type (up to ten types) and select the desired configuration whenever you print on a particular stock.

Creating Paper Configurations

To create a configuration for a specific paper type, make sure the paper you want to configure is loaded in the printer. Then follow these steps:

1. Press the Menu >/↵ button, then press the ∨ button until CUSTOM PAPER appears on the display.
2. Press the Menu >/↵ button to display PAPER NUMBER.
3. Press the Menu >/↵ button, then press the ∨ button to select a paper configuration number (1 to 10). Press the Menu >/↵ button again to save the number setting.
4. Press the < button, then the ∨ button to display PLATEN GAP. Press the ∨ button to select NARROW, STANDARD, WIDER, or WIDE. The STANDARD setting is recommended for most paper types.
5. Press the < button, then the ∨ button to display THICKNESS PAT.
6. Press the Menu >/↵ button twice to print the paper thickness pattern. The printer prints a pattern similar to the following:

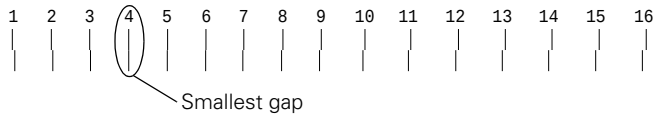

7. Examine the printed pattern for the most evenly overlapping lines. In the example shown above, the lines under number 4 are the most even.
8. After printing the pattern, THICKNESS NUM is displayed. Press the ∨ button to select the number noted in step 7.
9. Press the Menu >/↵ button to save the selected value. Press the < button, then the ∨ button for the menu options shown below. Make any adjustments, as needed, and press the Menu >/↵ button to save each setting.

   You can also make similar settings using the printer driver software. For instructions, see page 50 (Mac OS X), page 67 (Mac OS 9), or page 86 (Windows).

- CUT METHOD lets you decrease the cutting blade pressure for thinner media, or adjust the speed for thick media. You may need to experiment to determine the cleanest cut for your paper.
- PPR FEED ADJUSTMENT helps eliminate banding. Choose a lower value if you see white lines on your prints, or a higher value if you see dark lines.
- EJECT ROLLER TYPE lets you define the eject roller for printing with non-EPSON media. You may need to experiment to determine the best setting for your paper.
- DRYING TIME lets you print with non-EPSON media and avoid smearing the ink. You can make the print head wait up to 10 seconds after each pass to allow ink to dry on the page.
- SUCTION lets you decrease the paper suction level when printing on thin media (under 12 lb), such as drafting paper or backlight film.
- M/W ADJ adjusts the intensity of the MicroWeave® pattern. This improves print quality, but lowers printing speed.

10. When done, press the ▮▮ Pause button.

Selecting Paper Configurations

Once you have created a paper configuration, you can select it whenever you print on that paper:

1. Press the Menu >/↵ button, then press the ∨ button to display CUSTOM PAPER. Press the Menu >/↵ button again.
2. Press the ∨ button to display PAPER NUMBER, then press the Menu >/↵ button.
3. Press the ∨ button to select the configuration number that you want to use. If you select STANDARD, the printer uses the driver settings. If you select a number from 1 to 10, the control panel settings override the driver settings.
4. Press the Menu >/↵ button. The configuration number you selected is displayed on the LCD.
5. Press the ▮▮ Pause button to exit the menu.

Chapter 2: Printing with EPSON Drivers for Macintosh

Your EPSON Stylus Pro 4000 comes with drivers and utilities that let you print and manage print jobs in non-PostScript® mode. ICC profiles for ColorSync® are included, so you can use color management features in Photoshop or other applications, or in the driver itself.

A color-managed workflow using Adobe Photoshop will give you the most accurate colors and best photographic output from your EPSON Stylus Pro 4000. You need to make sure your Photoshop color settings are optimized for your printer, as described on the *Mastering Your Printer* CD-ROM.

You can create your own profiles if you have the required hardware and software, or you can have them created by a color specialist. Make sure any profiles you want to use are located in the standard folder for your operating system. When you install the EPSON printer driver, the ready-made profiles are automatically copied to the right folder.

Tip: Check the EPSON Pro Graphics website at http://prographics.epson.com for updated drivers and utilities that may become available.

This chapter includes the following information for both Macintosh OS X and OS 9.x:

- Choosing page setup settings for cut sheets and roll paper
- Choosing basic print settings
- Choosing advanced print options, including color manangement and paper configuration settings
- Monitoring print jobs
- Checking printer status
- Sharing your printer on a network

Printing in Macintosh OS X

Before you print, make sure you have installed the EPSON printer driver and utilities from the CD-ROM. You also need to configure your connection and select the various media input types that you want to use. For instructions on installing and configuring the printer driver, see the *Start Here* sheet.

Choosing Page Setup Options

Note: Many application settings override the printer's page setup options. Always verify settings to get the results you expect.

If you need more information about print options, click the **Help** button.

Page Setup options let you choose from several print queues for printing on cut sheets or roll paper. You can also select the orientation of your image and the paper size. For printing on roll media, creating a custom page size is recommended to make the best use of your paper.

1. Open the file you want to print and select Page Setup in your application. You see this screen:

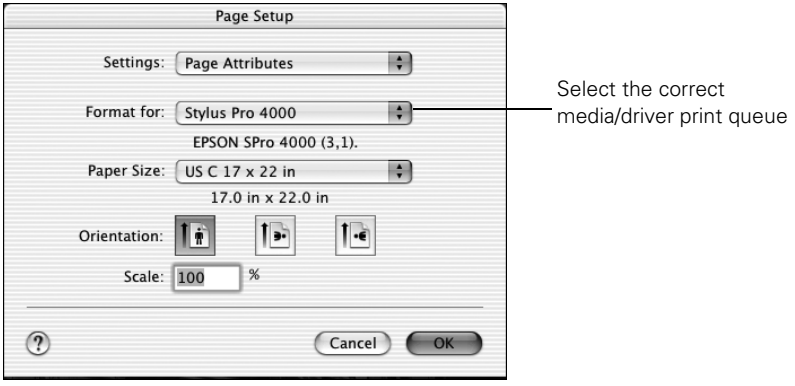

2. Open the Format for pull-down menu and select the correct print queue.

   The available settings depend on which print queues you selected in the Print Center (or Printer Setup Utility), including both standard and borderless printing.

Note: If your application has margin settings, make sure they're turned off for borderless printing.

   Note the following limitations on borderless printing:

   - Borderless printing takes longer than normal printing.
   - Margins are required at the top and bottom of the page on cut sheets. Full borderless printing is available on roll paper only.

3. Choose one of the following print queues:

   - Stylus Pro 4000 (the standard setting) prints on cut sheet paper with a bottom margin larger than the top and sides.
   - Borderless (Auto Expand) prints on cut sheets and enlarges your image (up to 3%) to fit the width of the paper (without side borders).
   - Borderless (Retain Size) prints your image at the size you specify in your application. You need to size it slightly wider than the paper width to print without side borders.
   - Maximum reduces the bottom margin (available for printing on plain paper sheets only).
   - Roll Paper - Banner prints a series of continuous images without any margin space between them, but with normal side borders.
   - Roll Paper - Borderless (Auto Expand) prints without borders on roll paper and enlarges your image (up to 3%) to fit the size of the paper. This selection is recommended for borderless printing with minimal clipping of your image. See page 46 for more information about borderless printing.
   - Roll Paper - Borderless (Retain Size) prints your image on roll paper at the size you specify in your application. You need to size it slightly wider than the paper width to print without borders. See page 46 for more information about borderless printing.
   - Roll Paper - Borderless Banner prints a series of continuous borderless images without space between them.
   - Roll Paper prints on roll paper with the standard printable area.

4. Click the Paper Size pull-down menu.

   - If you're printing on cut-sheets, select the size of the paper loaded in the printer. Then continue with step 7.
   - If you're using roll paper, EPSON recommends that you create a custom paper size to make the best use of your paper. Click the Settings pull-down menu (at the top of the screen) and select Custom Paper Size.

You see this screen:

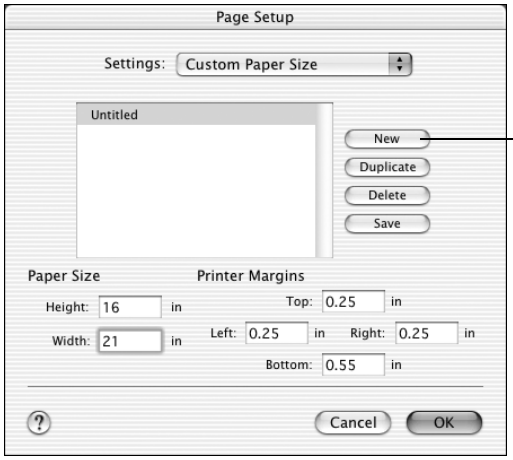

Tip: To ensure that the image is centered on the page, make the top and bottom margins the same.

5. Click New, double-click Untitled, give your paper size a name, and define its size and margins. Then click Save. (Do not click OK yet.)
6. Select Page Attributes from the Settings pull-down menu. Make sure your new custom page size is showing.
7. Choose the appropriate Orientation and Scale for printing.
8. Click OK. Then continue with the instructions in the next section to select additional settings for printing.

Borderless Printing

For true borderless printing on roll paper, you need to select either Roll Paper - Borderless (Auto Expand) or Roll Paper - Borderless (Retain Size) and create a custom paper size. Your image may be clipped on the left and right edges, but you can minimize clipping by sizing your image according to the page width.

The Auto Expand setting provides the best solution for borderless printing with minimal image clipping. Using this setting, you can create a custom paper width equal to the width of the roll media. If you use the Retain Size setting, you should create a custom paper width slightly wider that the actual width of the media.

The following table shows recommended image widths (in inches) for borderless printing using either the Auto Expand or Retain Size setting:

Recommended image widths (in inches) for borderless printing

Roll paper width	Image width (with Auto Expand)	Image width (with Retain Size)	Custom Paper Size (for Retain Size only)
8*	7.7675	8.3	8.2
8.3	8.06	8.35	8.3
10	9.7075	10.3	10.2
12*	11.695	12.3	12.2
14*	13.695	14.3	14.2
16	15.6	16.3	16.2
17	16.6	17.3	17.2

* Non-EPSON roll media widths

Choosing Basic Print Options

Once you have selected your page setup options, you need to select printing options. The EPSON driver offers automatic settings that optimize print quality and speed when you're using EPSON media. You can also choose advanced settings for more control over your printer and color management options, as described on page 50.

1. Select Print in your application. You see the screen shown below:

Caution: Always select the same setting for the Printer option in the Print window and the Format for option in the Page Setup window. If the settings are different, you may get unexpected results.

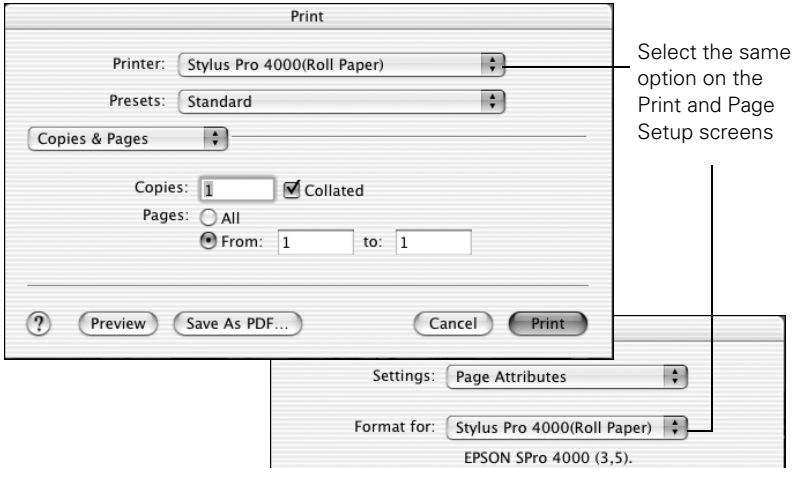

2. Open the Printer pull-down menu and select the same print queue for your printer that you chose in the Page Setup window.

3. Select Print Settings from the pull-down menu.

   You see this screen:

Select the Print Settings page

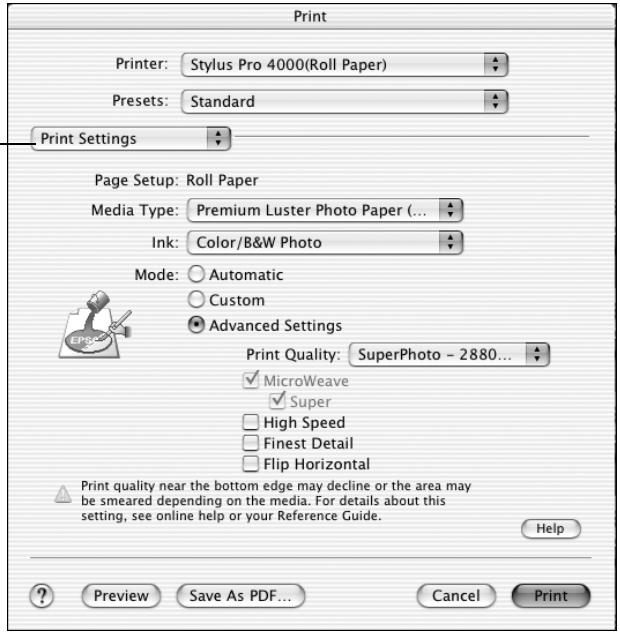

4. Select the Media Type that corresponds to the paper you are printing on. If you are using a color-managed workflow, make sure you choose media type and resolution settings that match the ICC profile you are using.

   The settings followed by (250) are for roll paper or selected 17-inch wide sheets. Choose a setting without the (250) designation when you print on smaller sheets. For EPSON UltraSmooth Fine Art Paper or PremierArt Water Resistant Canvas for Epson, choose the Watercolor Paper - Radiant White setting.

   If your paper is not listed, check the instructions included with the paper, or look on the EPSON web site (http://prographics.epson.com). If you are using non-EPSON paper, choose the closest setting. You may have to experiment with different settings to determine which one is best for the media you're using.

Note: Check the web site (http://prographics.epson.com) or your authorized EPSON dealer for other media that may be available.

5. For the Ink setting, select Color/B&W Photo for any type of photographic printing. Select Black only if you're printing line drawings or other non-photographic images.

6. Set the Mode option as follows:

   - Click Automatic to have the printer driver analyze the contents of your image or file and make the appropriate printing adjustments. If a Quality/Speed slider appears in the Mode box, set it according to the priorities of your print job.

   - Click Custom and then choose one of the settings shown at the left.

     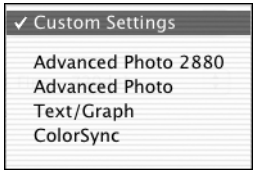

     The two Advanced Photo settings let you print at either 1440 dpi (Advanced Photo) or 2880 dpi, the highest resolutions available.

     The Text/Graph setting intensifies colors and lightens the midtones and highlights for non-photographic output.

     The ColorSync setting applies color management based on the printer's ICC profile, using the perceptual rendering intent. In most cases, you will get better results by applying color management in your application, rather than in the printer driver.

   - Click Advanced Settings to access additional options, as described below.

7. Choose one of the following Print Quality settings:

   Note: The Print Quality settings available depend on the Media Type you selected. Choose lower print quality for faster printing, or SuperPhoto - 2880dpi for best quality.

   - Draft to save ink
   - Normal - 360dpi for faster printing and everyday needs
   - Fine - 720dpi for photo lab quality photos and prints
   - SuperFine - 1440dpi for better than photo lab quality
   - SuperPhoto - 2880dpi for the highest quality photos and prints; provides an astonishing level of photographic quality

8. Choose any of the following:

   - High Speed for fast, bidirectional printing. For higher quality, make sure you deselect this option.
   - Finest Detail for sharper edges on text, graphics, and line art.
   - Flip Horizontal for printing a mirror image of your file. Use with backlight film.

Continue with the instructions in the next section to select color management settings. If you are using the color management settings in Photoshop or another application, it is very important to turn off color management in the printer driver, as described on page 51.

Choosing Color Management and Paper Configuration Options

Follow these instructions to turn off color management in the printer driver. If necessary, you can control the ink density by using the paper configuration settings, as described on page 51.

1. Select Printer Color Management from the pull-down menu. You see this screen:

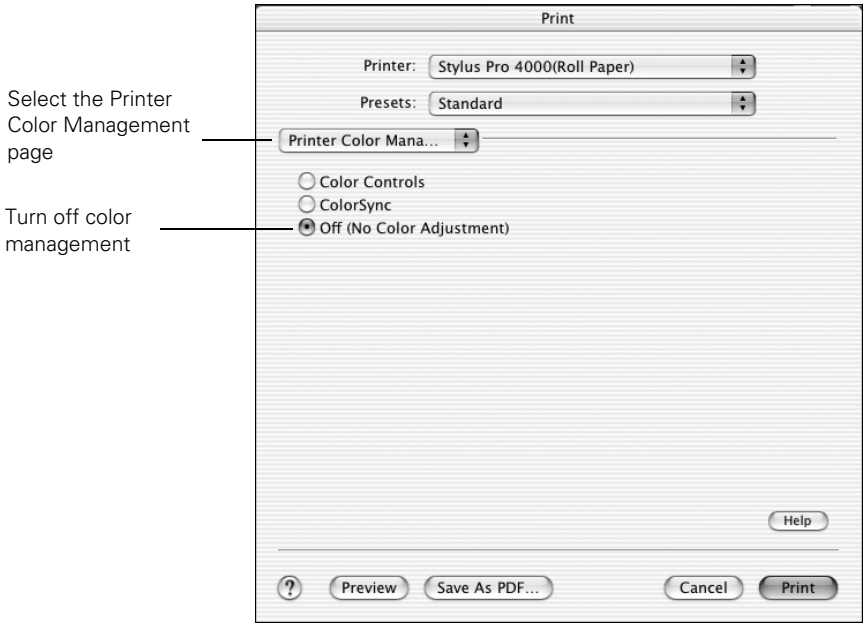

2. Select one of the following settings:

   - Color Controls to specify individual values for brightness, contrast, saturation, and CMY inks, or choose from two Color Adjustment modes. You can also choose from three Gamma settings.
   - Color Sync for mapping colors to your printer's profile. In most cases, you will get better results by applying color management in your application, rather than in the printer driver.

- No Color Adjustment to disable color management in the printer driver. Choose this mode when you use a color-managed workflow in Photoshop or other software applications.

Note: You may need to change the Color Density setting if your color profile was created to optimize D-max and color gamut.

3. If you are using non-EPSON media and you need to fine-tune its performance, select Paper Configuration from the pull-down menu. You see this screen:

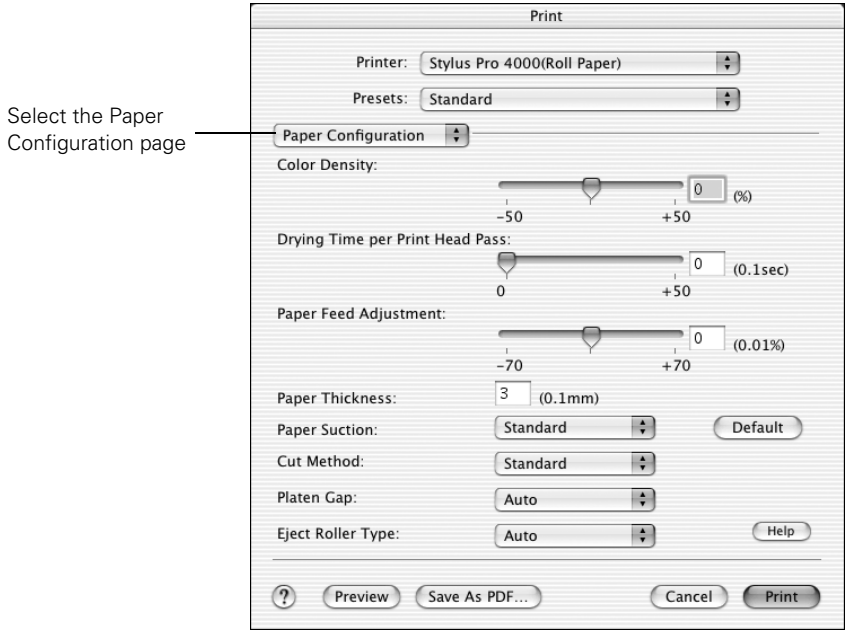

4. Select the correct settings to match your ICC profile. These settings override any paper configuration settings you may have made using the printer's control panel.

   - Color Density lets you control the ink saturation level (for example, when you turn off color management in your printer software).
   - Drying Time per Print Head Pass lets you print with non-EPSON media and avoid smearing the ink. You can make the print head wait up to 5 seconds after each pass to allow ink to dry on the page.
   - Paper Feed Adjustment helps reduce banding. Choose a lower value if you see white lines on your prints, or a higher value if you see dark lines.

- Paper Suction lets you decrease the paper suction level when printing on thinner papers (less than 12 lb), such as CAD drafting paper or backlight film.
- Paper Thickness helps reduce vertical banding and creates a sharper image when printing on unusually thick or thin paper.
- Cut Method decreases the cutting blade pressure for thinner media, or adjusts the speed for thick media. You may need to experiment to determine the best setting for your paper.
- Platen Gap lets you fine-tune the setting for various paper thicknesses.
- Eject Roller Type lets you define the eject roller for printing on non-EPSON media. You may need to experiment to determine the best setting for your paper.

Choosing Roll Paper Options

If you are printing on roll paper, make sure you choose one of the roll paper print queues, as described on page 44. In addition, you need to check these settings for various cutting options.

1. Select Roll Paper Option from the pull-down menu shown below. You see this screen:

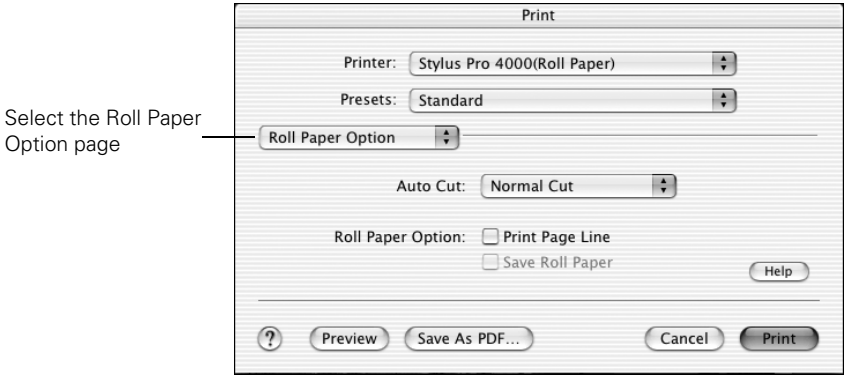

2. Choose one of the following Auto Cut settings:

   - Normal Cut allows margin space at the top and bottom of each image.
   - Double Cut extends the space between the images and trims each print individually. This provides the cleanest edge for borderless printing.
   - Single Cut causes the images to be printed end-to-end and saves paper. With borderless printing, you may see a sliver of the previous or next image.
   - Off disables automatic cutting. Choose this setting if you want to operate the cutter manually, print multiple print jobs without cutting, or if you are printing on heavy media that must be cut with scissors.

     See page 38 for instructions on using the button to operate the cutter. See page 32 for a list of media that do not work with the built-in cutter.

3. Select either of the following options:

   - Print Page Line prints trim lines on the right and bottom edges of your pages.
   - Save Roll Paper saves paper by not feeding the blank portion of the last page of your document. Available only when you've selected Roll Paper (Banner) as the Paper Source.

Note: These settings override settings made through the control panel.

Creating a Custom Preset and Printing

Note: If you check the settings on each screen in the pull-down menu, go through them carefully from top to bottom. Avoid cycling through them repeatedly, or you may lose your settings.

Once you've made the correct settings for your print job, create a custom preset. This will save you time when you use the same profile/printer/ink/media combination for future print jobs.

1. Select Summary from the pull-down menu.
2. After verifying that your settings are correct, select Save As from the Presets pull-down menu.

You see the following:

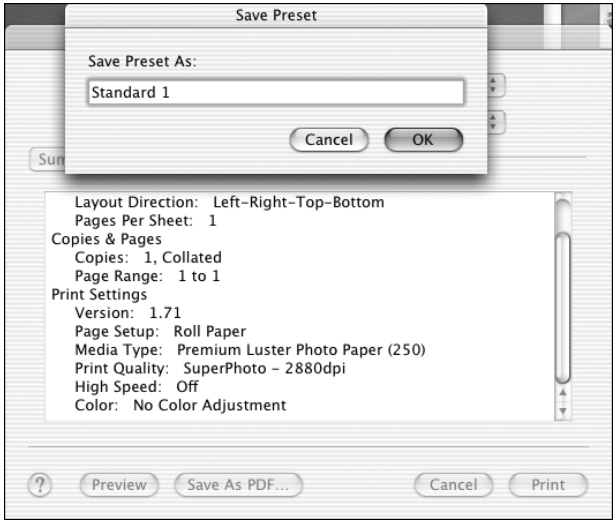

Caution: Do not open and close the Presets pull-down menu without typing a name, or you will lose your settings.

3. Type a name, and click OK.
4. When you're ready to print, click the Print button.

   See the next section for instructions on monitoring your print job.

Monitoring Print Jobs

After you click Print, you can monitor the progress of your print job using the Print Center /Printer Setup Utility. Follow these steps:

1. Click the Print Center/Printer Setup Utility icon if it has been copied to the dock on the bottom of your desktop.
2. Double-click your printer (and print queue) name.

You see a screen like this:

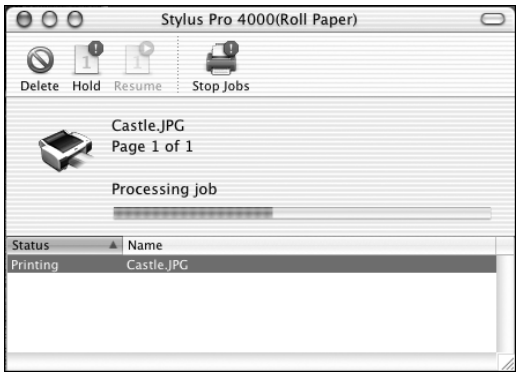

3. From here you can monitor the progress of your print job or do one of the following:
   - Click the print job, then click Delete to cancel the job
   - Click the print job, then click Hold to pause printing
   - Click a print job marked "Hold" and click Resume to resume printing
   - If Multiple print jobs are listed, click a print job, then click the Priority arrow as necessary to reorder the jobs
4. When you're finished, close the print job window, then close Print Center/Printer Setup Utility.

Checking Ink Levels

The EPSON Printer Utility lets you check the levels of ink in the printer. You can also run maintenance utilities from this screen. See pages 96 to 97 for instructions.

1. Double-click the Applications folder on your hard drive.
2. Double-click EPSON Printer Utility.

3. Select your printer and click OK. You see the EPSON Printer Utility screen:

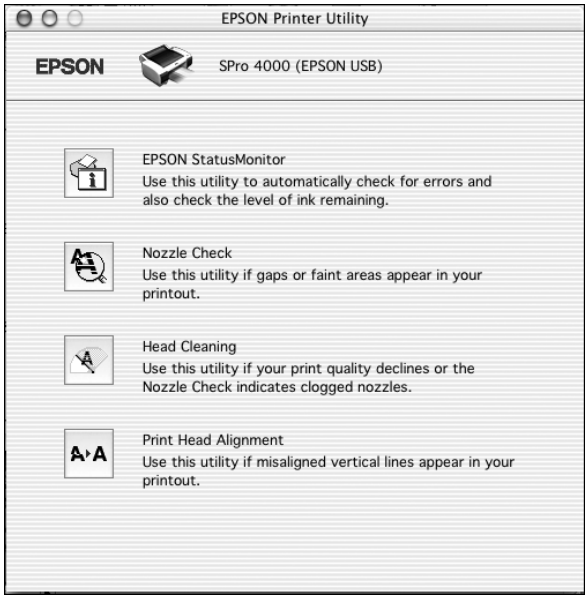

4. Click the EPSON StatusMonitor icon.

   The software checks the amount of ink remaining in the printer and displays the StatusMonitor window:

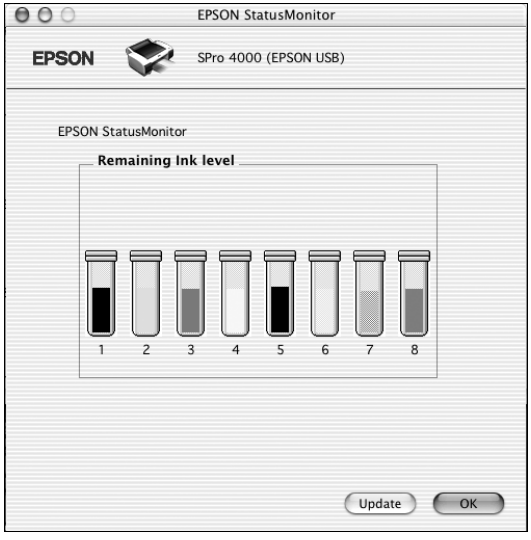

5. To recheck the ink level, click the Update button. To close the Status Monitor, click OK.

Sharing Your Printer on a Network

If the printer is connected to a Macintosh on a network, other computers on the network can also access the printer.

1. On the Macintosh to which the printer is connected, open System Preferences > Sharing.

2. Click the Printer Sharing checkbox. Printer sharing is enabled.

3. On other Macintosh computers on the network, click Print Center on the menu bar, then open the Preferences menu (Mac OSX 10.2.x).

4. Select Show printers connected to other computers. Shared printers are highlighted on the Printer List screen (Mac OSX 10.2.x).

Printing in Macintosh OS 9.x

Before you print, make sure you have installed the EPSON printer driver and utilities from the CD-ROM. You also need to select your printer in the Chooser. For instructions on installing and selecting the printer driver, see the *Start Here* sheet.

Note: Many application settings override the printer's page setup options. Always verify settings to get the results you expect.

If you need more information about print options, click the **?** button on any dialog box.

Choosing Page Setup Options for Cut Sheet Printing

Many of the page setup options correspond to paper handling features that you can also set through the control panel. Software options give you additional settings and override control panel settings.

1. Open the file you want to print, and select Page Setup in your application. You see the page setup dialog box:

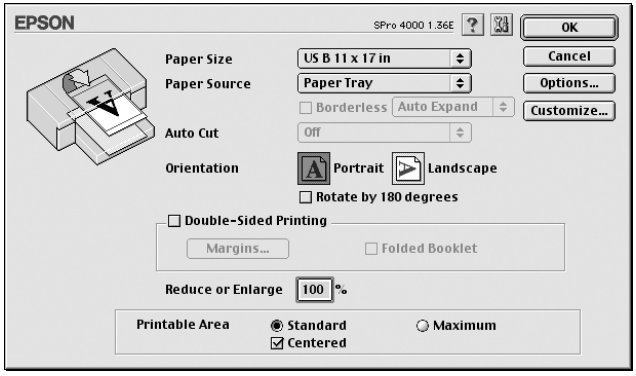

2. If you're using cut sheets, select the Paper Size.

   If you're using roll paper, creating a custom page size is recommended for making the best use of your paper. For more information about printing on roll paper, see page 59.

3. Select Paper Tray, Manual Feed, or one of the Roll Paper sizes from the Paper Source list. For more information about printing on roll paper, see page 59.

4. Make the settings you want for Orientation and Reduce or Enlarge.

5. If you want to print on both sides of the paper, select Double-Sided Printing. See your electronic *Reference Guide* for more information about double-sided printing.

6. Choose one of the following for Printable Area (available only when Paper Source is set to Paper Tray or Manual Feed):
   - Standard makes the bottom margin larger than the top and sides.
   - Maximum reduces the bottom margin (available only for plain paper).
   - Centered places the image in the center of the printable area.

7. After making your settings, click OK.

Note: Many application settings override the printer's page setup options. Always verify settings to get the results you expect.

If you need more information about print options, click the **?** button on any dialog box.

Choosing Page Setup Options for Roll Paper and Borderless Printing

Although you can select borderless printing for cut sheets as well as roll paper, you can only print to the side edges on cut sheets. Margins are required at the top and bottom of the page. Follow these steps to print on roll paper:

1. Open the file you want to print, and select Page Setup in your application. You see the page setup dialog box:

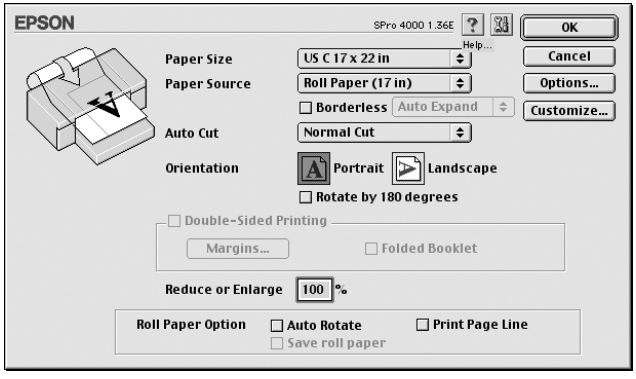

2. You can select the size of your image for the Paper Size. However, EPSON recommends creating a custom paper size that is slightly larger than the image size.

After clicking customize, you see the custom page size window:

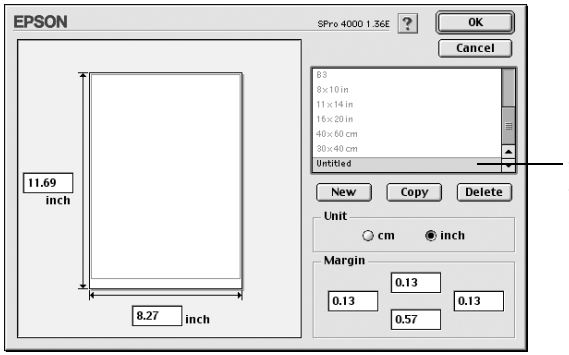

Click New, double-click Untitled, then enter a name for the custom size. Enter the size (inches or centimeters). You can also enter margin settings for your custom paper size or for any standard paper size.

3. Select one of the Roll Paper sizes from the Paper Source list.

   Select Roll Paper (Banner) to print a series of continuous images without any margin space between them.

Note: If your application has margin settings, make sure they're turned off.

4. If you want to print borderless images, select Borderless.

   Note the following limitations on borderless printing:

   - Borderless printing takes longer than normal printing.
   - Margins are required at the top and bottom of the page on cut sheets. Full borderless printing is available on roll paper only.

   Choose Auto Expand or Retain Size from the pull-down menu:

   - Auto Expand enlarges your image (up to 3%) to fit the size of the paper.
   - Retain Size prints your image at the size you specify in your application. You need to size it slightly wider than the paper width if you want to print without borders.

See page 62 for more information about borderless printing.

5. Choose one of the following Auto Cut settings:

   - Normal Cut allows margin space at the top and bottom of each image.
   - Double Cut extends the space between the images and trims each print individually. This provides the cleanest edge for borderless printing.
   - Single Cut causes the images to be printed end-to-end and saves paper. With borderless printing, you may see a sliver of the previous or next image.
   - Off disables automatic cutting. Choose this setting if you want to operate the cutter manually, print multiple print jobs without cutting, or if you are printing on heavy media that must be cut with scissors. See page 38 for instructions on using the button to operate the cutter.

6. Make the settings you want for Orientation and Reduce or Enlarge.

7. Select any of the following options:

   - Auto Rotate saves paper if your document length is shorter than the printable width of the paper roll. Your image is rotated automatically by 90 degrees and printed crosswise.
   - Print Page Line prints trim lines on the right and bottom edges of your pages.
   - Save Roll Paper saves paper by not feeding the blank portion of the last page of your document. Available only when you've selected Roll Paper (Banner) as the Paper Source.

Note: These settings override settings made through the control panel.

8. After making your settings, click OK.

9. Print your image.

Recommended Settings for Borderless Printing

For true borderless printing on roll paper, you can select either Auto Expand or Retain Size and create a custom paper size. Your image may be clipped on the left and right edges, but you can minimize clipping by sizing your image according to the page width.

The Auto Expand setting provides the best solution for borderless printing with minimal image clipping. Using this setting, you can create a custom paper width equal to the width of the roll media. If you use the Retain Size setting, you should create a custom paper width slightly wider that the actual width of the media.

The following table shows recommended image widths (in inches) for borderless printing using either the Auto Expand or Retain Size setting:

Recommended image widths (in inches) for borderless printing

Roll paper width	Image width (with Auto Expand)	Image width (with Retain Size)	Custom Paper Size (for Retain Size only
8*	7.7675	8.3	8.2
8.3	8.06	8.35	8.3
10	9.7075	10.3	10.2
12*	11.695	12.3	12.2
14*	13.695	14.3	14.2
16	15.6	16.3	16.2
17	16.6	17.3	17.2

* Non-EPSON roll media widths

Choosing Basic Print Options

Once you have selected your page setup options, you need to select printing options. The EPSON driver offers automatic settings that optimize print quality and speed when you're using EPSON media. You can also choose advanced settings for more control over your printer and color management options, as described on page 65.

1. Select Print in your application. A dialog box like the following appears:

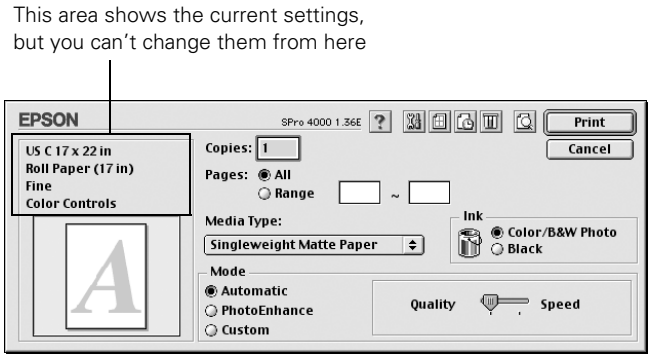

2. Choose the number of Copies and indicate which Pages you want to print.

3. Select the Media Type that corresponds to the paper you are printing on. If you are using a color-managed workflow, make sure you choose media type and resolution settings that match the ICC profile you are using.

   The settings followed by (250) are for roll paper or selected 17-inch wide sheets. Choose a setting without the (250) designation when you print on smaller sheets. For PremierArt Water Resistant Canvas for Epson, choose the Watercolor Paper - Radiant White setting.

   If your paper is not listed, check the instructions included with the paper, or check the EPSON web site (http://prographics.epson.com). If you are using non-EPSON media, choose the closest setting. You may have to experiment to determine the best setting for your media.

Note: Check the web site (http://prographics.epson.com) or your authorized EPSON dealer for other media that may be available.

4. For the ink type, select Color/B&W Photo if you're printing either a color or black-and-white photo image. Select Black only if you're printing line drawings or other non-photographic images.

Tip: For black-and-white photography, use the Color/B&W Photo setting (don't select Black).

5. Set the Mode option as follows:

   - Click Automatic to have the printer driver analyze the contents of your image or file and make the appropriate printing adjustments. If a Quality/Speed slider appears in the Mode box, set it to Quality for higher resolution prints.
   - Click PhotoEnhance to have the driver automatically adjust the contrast, saturation, and brightness. You can also select automatic enhancements or filters for People, Nature, Soft Focus, Sepia or Digital Camera Correction.
   - Click Custom and then choose one of the following settings, or click the Advanced button and see page 65 for more information.

     The two Advanced Photo settings let you print at either 1440 dpi (Advanced Photo) or 2880 dpi, the highest resolutions available.

     The Text/Graph setting intensifies colors and lightens the midtones and highlights for non-photographic output.

     The ColorSync setting applies color management based on the printer's ICC profile, using the perceptual rendering intent.

6. Choose from the following buttons to access additional features:

   - Click to access the printer monitoring and maintenance utilities. See page 70 for more information about the Status Monitor utility. See Chapter 4 for details about the maintenance utilities.
   - Click if you want to reduce your image to fit the page or for other layout options.
   - Click to turn on background printing. This lets you work on your Macintosh while you're printing and use the Monitor IV utility. See page 68 for more information.
   - Click to check your ink levels.
   - Click and then click the Preview button to preview your print.

7. When you're finished choosing print options, click Print. You can also select Save File or Preview.

Choosing Advanced Print Options

The advanced print settings give you complete control over your printing environment. Use these settings to experiment or to fine-tune a range of options to meet your individual needs.

1. Follow steps 1 through 4 on page 63.

2. Click Custom and then click Advanced. You see a dialog box like the following:

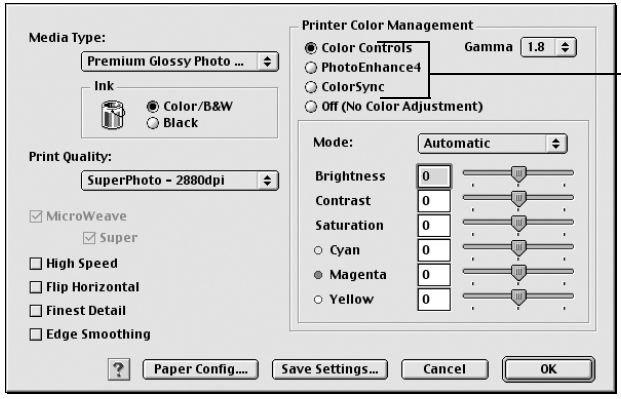

These three settings give you different options on the lower part of the screen

3. If necessary, you can change your Media Type and Ink settings.

Note: The Print Quality settings available depend on the Media Type you selected. Choose lower print quality for faster printing, or SuperPhoto - 2880dpi for best quality.

4. Choose one of the following Print Quality settings:

   - Draft to save ink
   - Normal - 360dpi for faster printing and everyday needs
   - Fine - 720dpi for photo lab quality photos and prints
   - SuperFine - 1440dpi for better than photo lab quality
   - SuperPhoto - 2880dpi for the highest quality photos and prints; provides an astonishing level of photographic quality

5. Choose any of the following:

   - MicroWeave or Super MicroWeave to eliminate unwanted banding effects. If you notice banding with the standard MicroWeave setting, select Super MicroWeave (if available).
   - High Speed for fast, bidirectional printing at lower quality.
   - Flip Horizontal for printing a mirror image of your file. Use with backlight film.
   - Finest Detail for sharper edges when printing text, graphics, and line art.
   - Edge Smoothing to improve the quality of low-resolution images.

6. Choose one of the following Color Management settings:

   - Color Controls lets you specify individual values for adjusting brightness, contrast, saturation, and CMY inks, or choose from the three Color Adjustment modes. You can also choose from three Gamma settings.
   - PhotoEnhance4 allows you to correct noise and other problems common to digital camera images or choose special tone and effect settings.
   - ColorSync lets you select from three Rendering Intent settings for mapping colors to your printer's EPSON Standard profile. In most cases, you will get better results by applying color management in your application, rather than in the printer driver.
   - No Color Adjustment
     Disables color management in the printer driver. Choose this mode when you use a color managed workflow in Photoshop or other software applications.

Tip: If you turn off color management, you can use the Color Density setting to control the ink density. Click the Paper Config button.

7. If you are using non-EPSON media and you need to fine-tune its performance, click the Paper Config button. You see this screen:

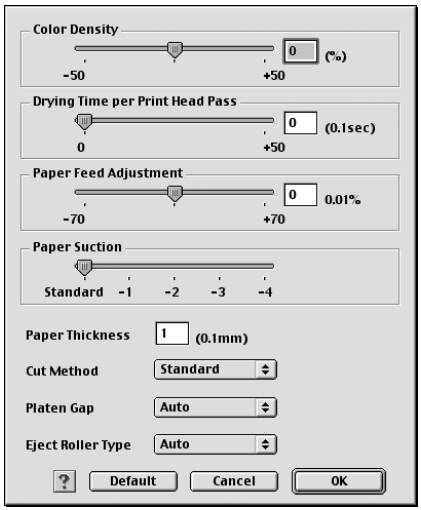

8. Select the correct settings to match your ICC profile. These settings override any paper configuration settings you may have made using the printer's control panel.

   - Color Density lets you control the ink saturation level (for example, when you turn off color management in your printer software).
   - Drying Time per Print Head Pass lets you print with non-EPSON media and avoid smearing the ink. You can make the print head wait up to 5 seconds after each pass to allow ink to dry on the page.
   - Paper Feed Adjustment helps eliminate banding. Choose a lower value if you see white lines on your prints, or a higher value if you see dark lines.
   - Paper Suction lets you decrease the paper suction level when printing on thinner media (less than 12 lb), such as CAD drafting paper or backlight film.
   - Paper Thickness helps reduce vertical banding and creates a sharper image when printing on unusually thick or thin paper.

- Cut Method decreases the cutting blade pressure for thinner media, and adjusts the speed for thick media. You may need to experiment to determine the best setting for your paper.
- Platen Gap lets you fine-tune the setting for various paper thicknesses.
- Eject Roller Type lets you define the eject roller for printing with non-EPSON media. You may need to experiment to determine the best setting for your paper.

9. Click Save Settings if you want to have your advanced settings available for reuse. Then type a name for the group of settings and click Save. The name is added to your list of custom settings.

10. When you're finished setting advanced printer options, click OK.

Managing Print Jobs

Your printer comes with several utilities that let you check on your print jobs and schedule, cancel, pause, or restart them. First you need to set up background printing, so you can continue to work on your Macintosh while a file is being printed. Note that background printing is slower and may also slow down your system.

You can set up background printing from the Chooser, as described on the *Start Here* sheet, or you can use the background printing button on the print dialog box. Follow these steps to set up background printing:

1. Open the file you want to print and select Print in your application.

2. Click the background printing button. You see the following dialog box:

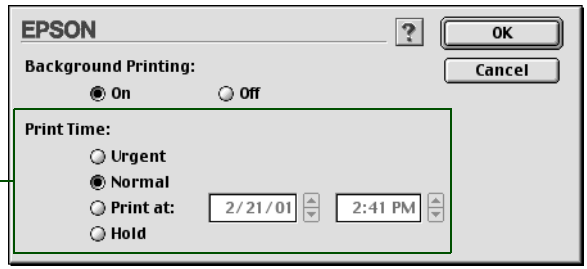

3. To turn background printing on, click the On button.

4. To select a priority for your print job in the queue of jobs waiting to print, click one of the following:
   - Urgent to print before any Normal priority job
   - Normal to print in the order the job is received
   - Print at: to print at the specific time you enter in the day and time in the fields to the right
   - Hold to hold the print job in the print queue until you're ready to release it using Monitor IV; see the following section for details.

5. Click OK to save your settings and return to the printer settings dialog box.

6. Click Print to print your document.

If you selected Print at: or Hold, your document is spooled, but held in the print queue until the print time specified or until released using Monitor IV, as described in the following section.

Monitoring Your Print Job

The Monitor IV utility lets you prioritize and control your print jobs as well as monitor their progress.

Note: You must turn on background printing to view the EPSON Monitor IV window. See page 68 for instructions, or use the Chooser.

After you send a print job, click the current application icon at the right end of the menu bar and select EPSON Monitor IV. You see a window like the following:

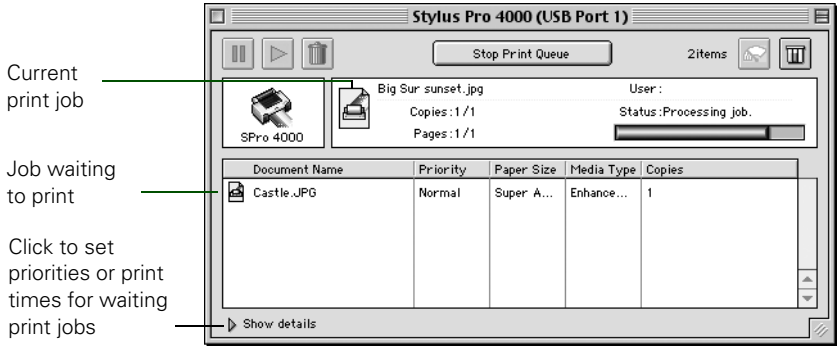

The progress bar tracks the current print job. To cancel, pause, or restart a print job, click the document's name, then click one of the following buttons:

- Click to cancel.
- Click to restart.
- Click to pause.

Note: If you see a stop sign icon and the message Print queue on hold in the EPSON Monitor IV dialog box, select **Start print queue** from the Printer menu to release the queue and resume printing.

You can also do the following:

- Double-click a file in the list to preview it.
- Double-click **Copies** to change the number of copies to be printed.
- Click to check your ink levels.
- Click to start the print head cleaning utility. See page 96 for more information about the cleaning utility.

Checking Printer Status

The Status Monitor utility lets you check the levels of ink in your printer and configure error messages and other features of printer operation. Follow these steps to check ink levels:

1. Click the utility button on the print or page setup dialog box. You see the utility menu:

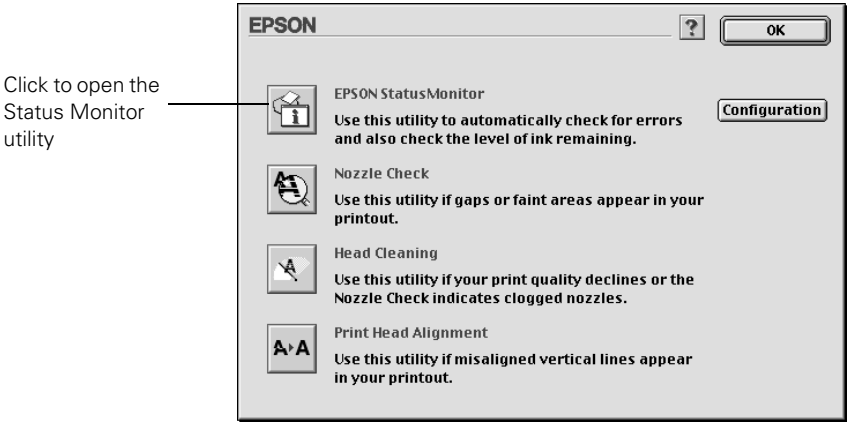

2. Click the **EPSON StatusMonitor** icon.

The software checks the amount of ink remaining in the printer and displays the Status Monitor window:

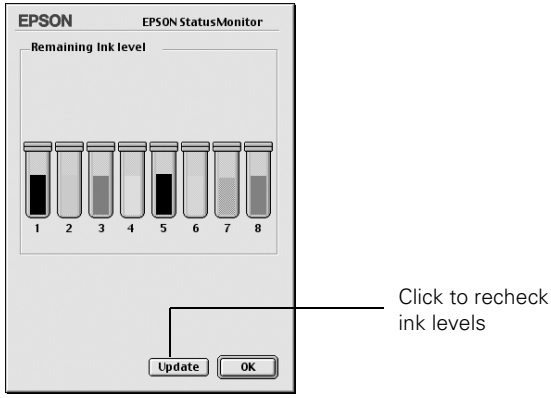

3. To recheck the ink level check, click the Update button. To close the Status Monitor, click OK.

Selecting Configuration Options

You can configure the way you want the printer to handle error and warning messages, ink level checks, and print file storage in the Configuration Settings dialog box. Follow these steps:

1. Click the utility button on the print or page setup dialog box. You see the utility menu.

2. Click the Configuration button.

You see the Configuration Settings dialog box:

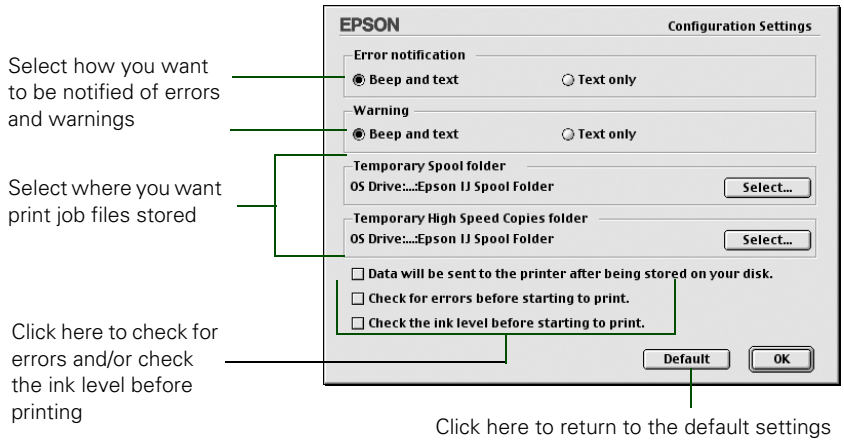

3. Select from the following configuration options:

Note: Warning messages allow printing to continue. Error messages are more serious and cause printing to stop.

- Error notification lets you choose whether you want your system to beep and display error message text or just display text if your printer encounters an error.
- Warning lets you choose whether warning messages beep and display text or display text only.
- Temporary Spool folder and Temporary High Speed Copies folder let you select the folders on your hard disk that store the temporary files created when you send a job to the printer. Click the Select button to change the folder from the default folder shown.
- Data will be sent to the printer after being stored on your disk prevents print head pausing. Normally, graphics are sent in rectangular bands. When you select this option, your Macintosh stores the entire image on its hard drive and then sends it to the printer as a whole (recommended only for older Macintosh systems).
- The last two checkboxes let you choose to have your software check for errors or low ink levels before starting your print job.

4. When you're finishing changing your configuration options, click OK to return to the utility menu.

Sharing Your Printer on a Network

If the printer is connected to a Macintosh computer on an AppleTalk® network, other computers on the network can also access the printer.

1. On the Macintosh to which the printer is connected, open the Chooser from the Apple® menu, click the printer name, and select the port where the printer is connected.

2. Click Setup. You see the Printer Sharing Setup window.

3. Select Share this Printer, and type in the printer name and password information as needed. Click OK.

4. Close the Chooser.

5. On other Macintosh computers on the network, open the Chooser from the Apple menu.

6. Click the printer name and select the shared printer. Only printers on the current AppleTalk zone are available.

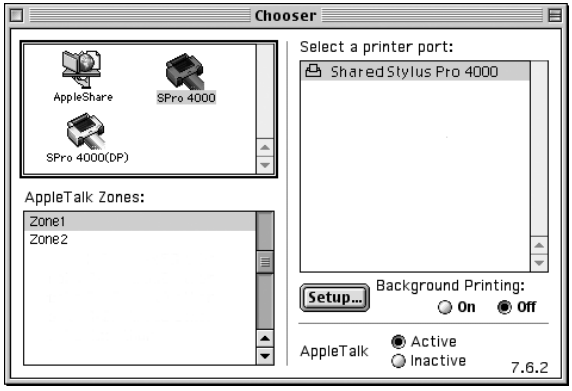

7. If a password box opens, enter the password for the printer and click OK.

8. Turn background printing on and close the Chooser.

Chapter 3: Printing with EPSON Drivers for Windows

Your Stylus Pro 4000 comes with drivers and utilities that let you print and manage print jobs in non-PostScript mode. ICC profiles are included, so you can use the color management features in Photoshop or other applications, or in the driver itself.

A color-managed workflow using Adobe Photoshop will give you the most accurate colors and best photographic output from your EPSON Stylus Pro 4000. You need to make sure your Photoshop color settings are optimized for your printer, as described on the *Mastering Your Printer* CD-ROM.

You can create your own profiles if you have the required hardware and software, or you can have them created by a color specialist. Make sure any profiles you want to use are located in the standard folder for your operating system. When you install the EPSON printer driver, the ready-made profiles are automatically copied to the right folder.

Tip: Check the EPSON Pro Graphics website at http://prographics.epson.com for updated drivers and utilities that may become available.

This chapter includes the following information:

- Choosing basic print options
- Choosing paper and layout options
- Choosing advanced print options
- Managing print jobs
- Sharing your printer on a network

Choosing Basic Print Options

Before you print, you need to set basic printing properties. Make sure you have installed the EPSON driver and utilities from the CD-ROM.

The driver offers automatic settings that optimize print quality and speed when you're using EPSON media. You can also choose advanced settings for more control over your printer and color management options, as described on page 83.

Follow these steps to make basic settings:

1. Start an application, open the file you want to print, and select Print in your application. You see the Print window.

2. Make sure your printer is selected, then click the Properties button. Or, if you see a Setup, Printer, or Options button, click it instead. Then click Properties on the next screen. You see a window like the following:

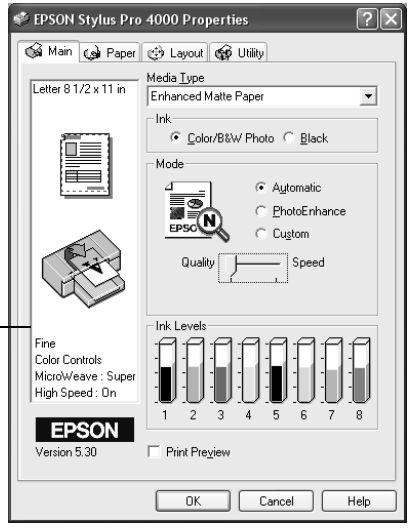

This box shows you the current settings, but you can't change them from here

Note: If you need more information about print options, you can click the Help button on any screen.

3. Select a Media Type setting that corresponds to the paper you are printing on. If you are using a color-managed workflow, make sure you choose media type and resolution settings that match the ICC profile you are using.

Note: Check the web site (http://prographics.epson.com) or your authorized EPSON dealer for other media that may be available.

The settings followed by (250) are for roll paper or selected 17-inch wide sheets. Choose a setting without the (250) designation when you print on smaller sheets. For EPSON UltraSmooth Fine Art Paper or PremierArt Water Resistant Canvas for Epson, choose the Watercolor Paper - Radiant White setting.

If your paper is not listed, check the instructions included with the paper, or check the EPSON web site (http://prographics.epson.com). If you are using non-EPSON media, choose the closest setting. You may have to experiment with different settings to determine which one is best for the media you're using.

4. For the Ink setting, select Color/B&W Photo if you're printing either a color or black-and-white photo image. Use a color-managed workflow for best results. Select Black only if you're printing line drawings or other non-photographic images.

5. Set the Mode option as follows:

   - Click Automatic to have the printer driver analyze the contents of your image or file and make the appropriate printing adjustments. If a Quality/Speed slider appears in the Mode box, set it to Quality for higher resolution prints.
   - Click PhotoEnhance to have the driver automatically adjust the contrast, saturation, and brightness. You can also select automatic enhancements or filters for People, Nature, Soft Focus, Sepia or Digital Camera Correction.
   - Click Custom, and then choose one of the settings shown at the left.

     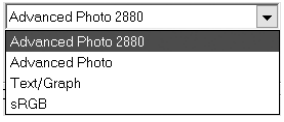

     The two Advanced Photo settings let you print at either 1440 dpi (Advanced Photo) or 2880 dpi, the highest resolutions available.

     The Text/Graph setting intensifies colors and lightens the midtones and highlights for non-photographic output.

     The sRGB setting adjusts colors using the small-gamut sRGB (standard red green blue) color space. Best for color matching with other sRGB devices, or for images designed for the Web.

   - Click Custom, then click the Advanced button to turn off color management in the printer driver or access additional settings, as described on page 83.

Note: In most cases, you will get better results by applying color management in your application, rather than in the printer driver. To do this, you must turn off color management in the printer driver, as described on page 85.

6. When you're finished choosing print options, click the Paper tab and follow the instructions below for choosing paper and layout options.

Note: Many application settings override settings in the printer driver. Always verify settings to get the results you expect.

Choosing Paper and Layout Options

You can select a variety of settings for margins, orientation, paper saving, sizing your image, and double-sided printing. Follow the instructions below to select settings for cut sheet paper, or the instructions on page 80 for roll paper.

Choosing Cut Sheet Paper Options

1. On the Properties window, click the Paper tab. You see this window:

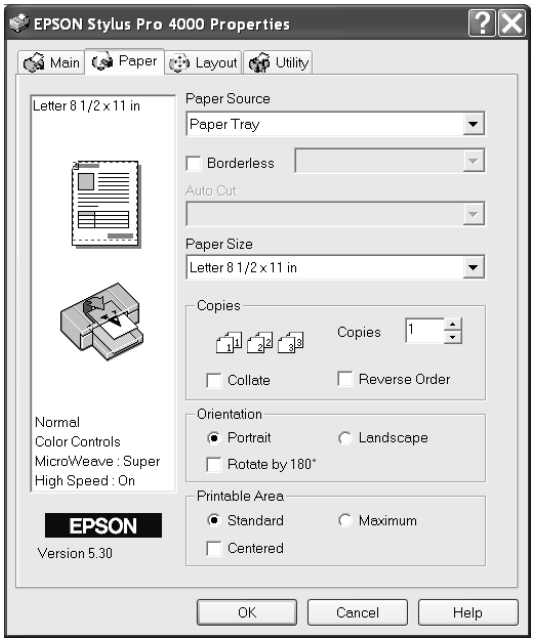

2. Select the paper source you're using (Paper Tray, Roll Paper, Roll Paper (Banner), or Manual Feed) from the Paper Source list.

   For more information about printing on roll paper, see page 80,

3. If you want to print to the edges of the page, click Borderless. Note that borderless printing applies only to the left and right sides of the page on cut sheets; margins are required at the top and bottom of the page. For full-bleed borderless printing, use roll paper, as described on page 80.

   Choose Auto Expand or Retain Size from the pull-down menu:

   - Auto Expand enlarges your image (up to 3%) to fit the size of the paper.
   - Retain Size prints your image at the size you specify in your application. You need to size it slightly wider than the paper width if you want to print without borders.

4. Select the Paper Size loaded in the printer.

5. Make the settings you want for Copies, Orientation, and Printable Area.

   - Standard makes the bottom margin larger than the top and sides.
   - Maximum reduces the bottom margin (available only for plain paper).
   - Centered places the image in the center of the printable area.

6. If you want to reduce or enlarge your image or print on both sides of the paper, click the Layout tab. See your electronic *Reference Guide* for more information about double-sided printing.

7. After making your settings, click OK.

Note: Many application settings override settings in the printer driver. Always verify settings to get the results you expect.

Choosing Roll Paper Options

Follow these steps to print on roll paper and select settings for borderless printing and automatic cutting:

1. On the Properties window, click the Paper tab. You see this window:

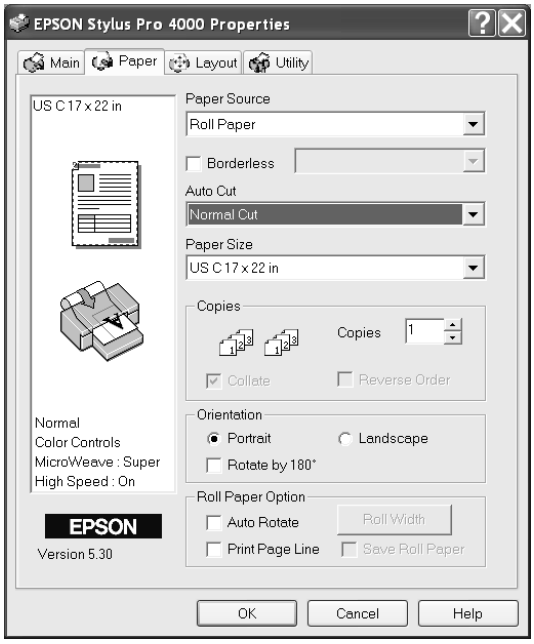

2. Select Roll Paper or Roll Paper (Banner) from the Paper Source list.

   The Roll Paper (Banner) setting allows you to print a series of continuous images without any margin space between them. This option is not available with all applications.

3. If you want to print without margins, click Borderless. Note that borderless printing takes longer than normal printing. See page 82 for more information about borderless printing.

Choose Auto Expand or Retain Size from the pull-down menu:

- Auto Expand enlarges your image (up to 3%) to fit the size of the paper.
- Retain Size prints your image at the size you specify in your application. You need to size it slightly wider than the paper width if you want to print without borders.

4. Choose one of the following Auto Cut settings:

   - Off disables automatic cutting. Choose this setting if you want to operate the cutter manually, print multiple print jobs without cutting, or if you are printing on heavy media that must be cut with scissors. See page 38 for instructions on operating the cutter manually.
   - Single Cut causes the images to be printed end-to-end and saves paper. With borderless printing, you may see a sliver of the previous or next image.
   - Normal Cut allows margin space at the top and bottom of each image.
   - Double Cut extends the space between images and trims each print individually. This provides the cleanest edge for borderless printing.

Tip: Creating a user-defined paper size generally lets you make the best use of your roll paper.

5. Select the size of your image as the paper size.

   To make the best use of your paper, creating a custom paper size is recommended. Select User Defined. You see this screen:

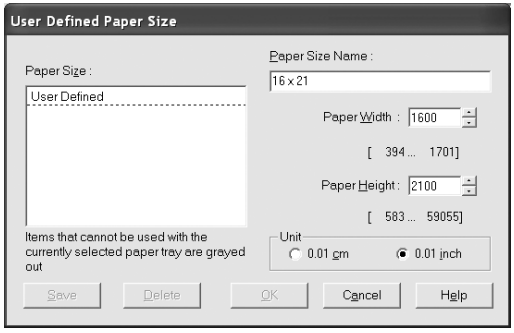

   Type a name for your custom size, then enter the size in hundredths of an inch (or centimeters) and click Save, then click OK.

6. If you are printing with margins, set the following options:
   - Auto Rotate saves paper if your document length is shorter than the printable width of the roll. The document is automatically rotated 90 degrees and printed crosswise. Be sure to click Roll Width and select the width of your roll paper.
   - Print Page Line prints trim lines on the right and bottom edges of your pages.
   - Save Roll Paper saves paper by not feeding the blank portion of the last page of your document. Available only if you've selected Roll Paper (Banner) as the Paper Source.

Note: Select Landscape when you want to rotate your image 90°.

7. Make the settings you want for Copies and Orientation.
8. If you want to reduce or enlarge your image, click the Layout tab. See the electronic *Reference Guide* for more information on layout settings.
9. After making your settings, click OK.

Borderless Printing

For true borderless printing on roll paper, you can select either Auto Expand or Retain Size and create a custom paper size, as described above. Your image may be clipped on the left and right edges, but you can minimize clipping by sizing your image according to the page width.

The Auto Expand setting provides the best solution for borderless printing with minimal image clipping. Using this setting, you can create a custom paper width equal to the width of the roll media. If you use the Retain Size setting, you should create a custom paper width slightly wider that the actual width of the media.

The following table shows recommended image widths (in inches) for borderless printing using either the Auto Expand or Retain Size setting:

Recommended image widths (in inches) for borderless printing

Roll paper width	Image width (with Auto Expand)	Image width (with Retain Size)	Custom Paper Size (for Retain Size only
8*	7.7675	8.3	8.2
8.3	8.06	8.35	8.3
10	9.7075	10.3	10.2
12*	11.695	12.3	12.2
14*	13.695	14.3	14.2
16	15.6	16.3	16.2
17	16.6	17.3	17.2

* Non-EPSON roll media widths

Choosing Advanced Print Options

The advanced settings give you complete control over your printing environment. If you are using color management setttings in Photoshop or another application, it is very important to access the advanced settings and turn off color management in the printer driver, as described on page 85.

1. Follow steps 1 through 4 beginning on page 76.

2. Click Custom and then click Advanced.

You see a window like the following:

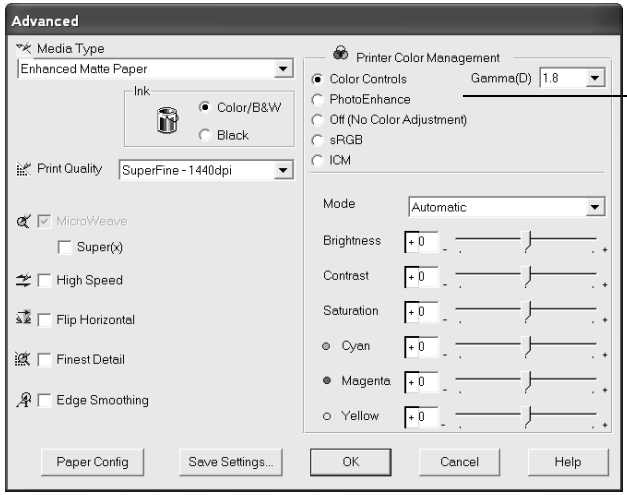

These settings give you different options on the lower part of the screen

Note: The Print Quality settings available depend on the Media Type you selected. Choose lower print quality for faster printing, or SuperPhoto - 2880dpi for best quality.

3. If necessary, you can change your Media Type and Ink settings.
4. Choose one of the following Print Quality settings:
   - Draft to save ink
   - Normal - 360dpi for faster printing and everyday needs
   - Fine - 720dpi for high quality photos and prints (deselect the High Speed checkbox to achieve photo lab quality)
   - SuperFine - 1440dpi for better than photo lab quality
   - SuperPhoto - 2880dpi for the highest quality photos and prints; provides an astonishing level of photographic quality
5. Choose any of the following:
   - High Speed for fast, bidirectional printing at lower quality.
   - Flip Horizontal for printing a mirror image of your file. Use with backlight film.
   - Finest Detail for sharper edges when printing text, graphics, and line art.
   - Edge Smoothing to improve the quality of low-resolution images.

6. Choose one of the following Color Management settings:

   - Color Controls lets you specify individual values for adjusting brightness, contrast, saturation, and CMY inks, or choose from the three Color Control modes. You can also choose from three Gamma settings, which control image contrast by modifying the midtones and midlevel grays.
   - PhotoEnhance allows you to correct noise and other problems common to digital camera images or choose special tone and effect settings.
   - Off (No Color Adjustment) disables color management in the printer driver. Choose this mode when you use a color managed workflow in Photoshop or other software.
   - sRGB adjusts colors using the small-gamut sRGB (standard red green blue) color space. Best for color matching with other sRGB devices, or for images designed for the Web.
   - ICM adjusts colors based on the printer's ICC profile, using the Image Color Matching system and the printer's EPSON Standard profile. In most cases, you will get better results by applying color management in your application, rather than in the printer driver.

7. If you are using non-EPSON media and you need to fine-tune its performance, click the Paper Config button.

Tip: If you turn off color management, you can still control the ink density, as described on page 86.

Note: You may need to change the Color Density setting if your profile was created to optimize D-max and color gamut.

You see the following:

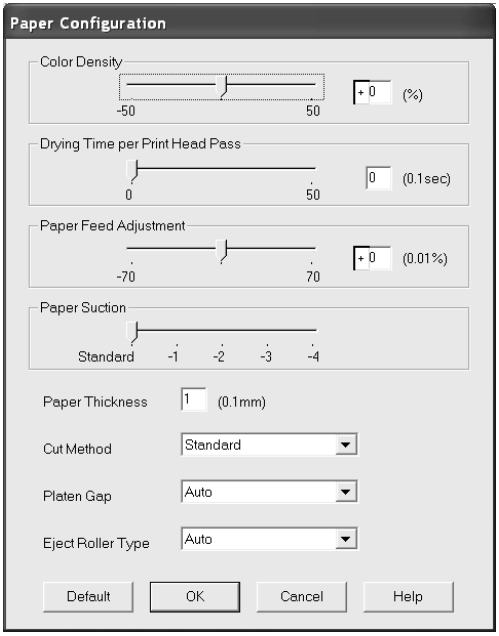

Select the correct settings to match your ICC profile. These settings override any paper configuration settings you may have made using the printer's control panel.

- Color Density lets you control the ink saturation level (for example, when you turn off color management in your printer software).
- Drying Time per Print Head Pass lets you print with non-EPSON media and avoid smearing the ink. You can make the print head wait up to 5 seconds after each pass to allow ink to dry.
- Paper Feed Adjustment helps reduce banding. Choose a lower value if you see white lines on your prints, or a higher value if you see dark lines.
- Paper Suction lets you decrease the paper suction level when printing on thinner papers (less than 12 lb), such as CAD drafting paper or backlight film.
- Paper Thickness helps reduce vertical banding and creates a sharper image when printing on unusually thick or thin paper.

- Cut Method decreases the cutting blade pressure for thinner media, and adjusts the speed for thick media. You may need to experiment to determine the best setting for your paper.
- Platen Gap lets you fine-tune the setting for various paper thicknesses.
- Eject Roller Type lets you define the eject roller for printing with non-EPSON media. You may need to experiment to determine the best setting for your paper.

8. Click Save Settings if you want to have your advanced settings available for reuse. Then type a name for the group of settings and click Save. The name is added to your list of custom settings.

9. When you're finished setting advanced printer options, click OK.

Managing Print Jobs

Your printer comes with several utilities that let you check on your print jobs and cancel, pause, or restart them.

The Progress Meter opens each time you send a print job. Status Monitor 3, which appears on the taskbar when you print, lets you check the printer's status and monitor print jobs.

Using the Progress Meter

After you send a print job, the Progress Meter window appears:

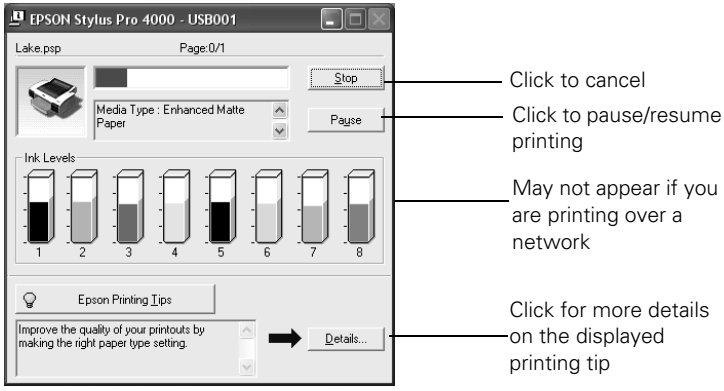

You can use the buttons to cancel, pause, or restart your print job. You also see how much ink you have left and view printing tips.

If you don't want the Progress Meter to appear, you can turn it off. See page 89 for instructions.

Setting Monitoring Preferences and Optimizing Print Speed

You can choose when and how you want to be notified of problems, whether you want a Status Monitor 3 icon to appear on your Windows taskbar, and whether you want to allow monitoring by other users who share the printer. You can also use the Speed and Progress utility to improve printing speed.

1. Do one of the following:
   - **Windows XP:** Click Start and select Printers and Faxes. Right-click your printer icon and select Printing Preferences.
   - **All other versions of Windows:** Click Start, point to Settings, then select Printers. Right-click your printer icon and select Properties, Document Defaults, or Printing Preferences.
2. Click the Utility tab, then click the Speed & Progress button. You see the Speed & Progress window:

Note: If you want to disable display of the progress meter during printing, you can click the Show Progress Meter checkbox to deselect it.

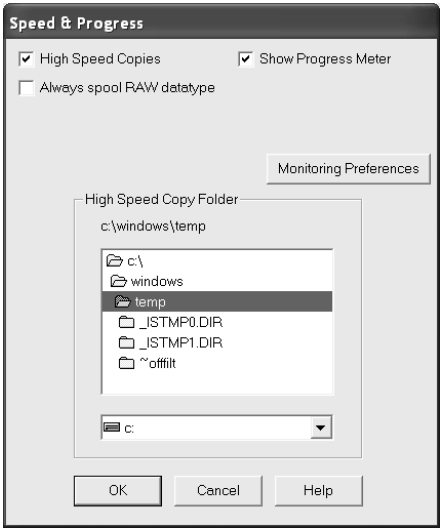

3. Select from the following options:

   - High Speed Copies speeds up printing of multiple copies of the same document using hard disk space as a cache. If you have multiple hard drives, you can select a different drive to spool to.
   - Show Progress Meter lets you control whether or not the Progress Meter is displayed when you send a print job.
   - Always spool RAW datatype (Windows 2000, XP, and NT only) lets you spool documents using the RAW format instead of the EMF (metafile) format. Because the RAW format requires fewer resources, printing is faster and you can avoid certain problems, such as insufficient memory or disk space.

4. Click the Monitoring Preferences button. You see the Monitoring Preferences window:

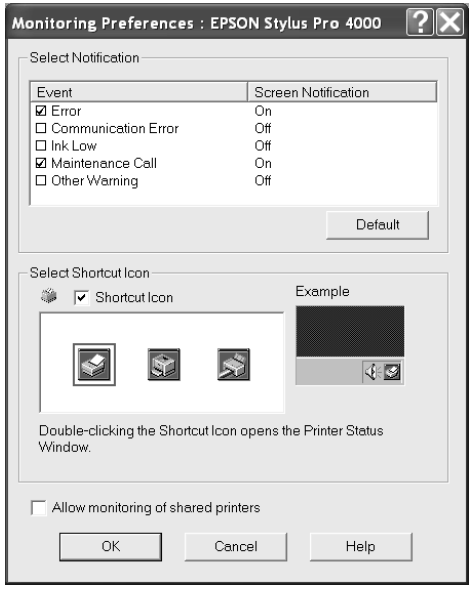

5. Select the Notification options you want to use.

6. If you want to have the Status Monitor 3 icon appear in your Windows taskbar, click the Shortcut Icon checkbox. Then select the icon to use.

   After you enable the shortcut, you can simply double-click the icon to open the Status Monitor 3 window or right-click it, then select Monitoring Preferences in the pop-up menu.

7. Select Allow monitoring of shared printers if your printer is shared and you want to let other users monitor it.

8. Click OK to save your settings.

9. Click OK to close the Speed & Progress dialog box and return to the Utility menu. Then click OK again to exit the Printers utility.

Sharing Your Printer on a Network

If your printer is connected to a computer on a network, other computers on the network can also access the printer. Follow these instructions for sharing your printer in Windows XP. If you're using a different version of Windows, see the electronic *Reference Guide* for instructions.

1. Click Start > Printers and Faxes. Right-click your printer icon and select Sharing.

2. Select Share this printer, type the name in the Share name box, then click OK.

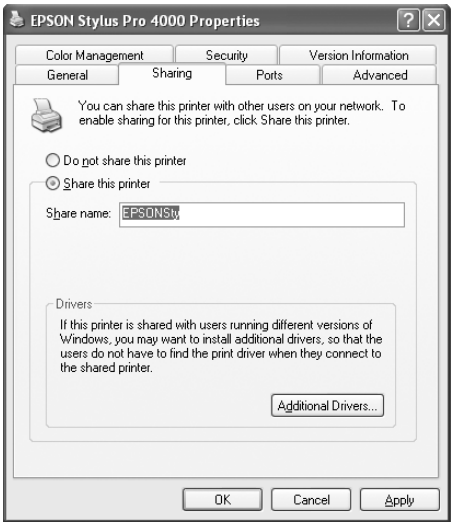

3. Install the printer driver from the software CD-ROM on the other computers that will access the printer over the network.

4. On each computer that will access the printer, click **Start > Printers and Faxes**. Right-click the printer icon and select **Properties**.

5. Click the **Ports** tab. You see a window like the following:

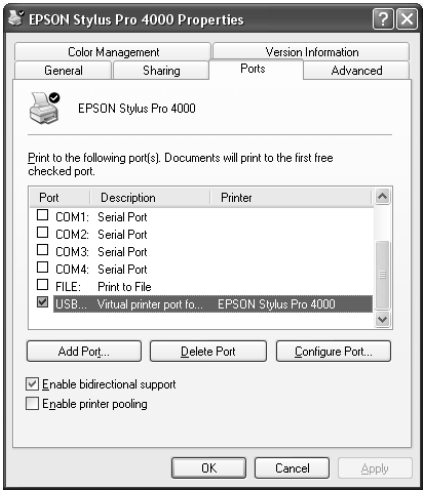

6. Click **Add Port**, select **Local Port**, then click **New Port**.

7. In the Port Name box, type the name of computer that is connected to the printer and the name of the shared printer (as shown below), then click OK.

8. Close the Printer Ports window to return to the Ports tab. Make sure the new port is added and the check box is selected. Then click OK.

Chapter 4: Maintaining and Transporting the Printer

The EPSON Stylus Pro 4000 requires very little maintenance to keep working its best. This chapter describes the following routine procedures:

- Checking printer status and part life
- Checking and cleaning the print head
- Aligning the print head
- Replacing ink cartridges
- Performing additional maintenance tasks
- Replacing the paper cutter blade
- Replacing the maintenance tank
- Cleaning the printer
- Transporting or storing the printer
- Uninstalling and reinstalling printer software

In addition to the features described in this chapter, you can also use the SelecType menu system on the printer to fine-tune a variety of printer settings. For more information, see the electronic *Reference Guide* included on the CD-ROM that came with your printer.

Note: To test the print quality, see page 96 for instructions on printing a nozzle check.

Checking Printer Status and Part Life

Using the SelecType menus, you can check the amount of ink remaining, the total number of prints, and the status of your cutter blade, maintenance tank, and other printer parts. You can either print out a status check, or you can view the printer's status on the LCD panel.

Printing Status Information

The status check sheet shows some of the current default settings, the amount of ink remaining in each cartridge, the page count, and the status of various printer parts.

Follow these steps to print the status check sheet:

1. Make sure paper is loaded in the tray.
2. Press the Menu >↵ button. You see PRINTER SETUP.
3. Press the ∨ button so you see TEST PRINT, then press Menu >↵ . You see NOZZLE CHECK.
4. Press ∨ so you see STATUS CHECK, then press Menu >↵. You see PRINT.
5. Press Menu >↵ again to start printing.

   The amount of ink left or the component life is indicated as follows:

   E*****F = 100–81% ink or service life remaining
   E**** F = 80–61%
   E*** F = 60–41%
   E** F = 40–21%
   E* F = 20–11%
   % = less than 10% ink or service life remaining

Note: You can replace the ink cartridges, cutter blade, and maintenance tank yourself. Other printer parts need to be replaced by an authorized EPSON service technician.

Viewing Status Information

To view printer status information instead of printing it, follow these steps:

1. Press the Menu >↵ button. You see PRINTER SETUP.
2. Press the ∨ button until you see PRINTER STATUS, then press Menu >↵. You see VERSION.
3. Do one of the following:
   - To check the firmware version, press Menu >↵ again. When done, press the < button.
   - To check the amount of ink left, press ∨ until you see INK LEFT, then press Menu >↵. The status of the first cartridge (MK, or matte black) is displayed, using the E*****F symbols described above. Continue pressing ∨ to see the status of the remaining cartridges. When done, press the < button.
   - To check how much of the maintenance tank has been used, presss ∨ until you see MAINT TANK, then press Menu >↵. The status of the tank is displayed, using the E*****F symbols described above. When done, press the < button.
   - To check the amount of ink used (in milliliters) and paper used (in square meters), press ∨ until you see USAGE COUNT, then press Menu >↵.

     You can change the units of measurement from meters to inches and feet by using the maintenance mode on the printer's control panel. See page 105 for instructions.
   - To check job history, press ∨ until you see JOB HISTORY, then press Menu >↵. For each job saved in the printer, you see the ink used (in milliliters) and paper used (in square meters). The most recent job is saved as No. 0. When done, press the < button.
   - To check the total number of prints, press ∨ until you see TOTAL PRINTS, then press Menu >↵. When done, press the < button.

- To check the status of other printer parts, press ∨ until you see SERVICE LIFE, then press Menu >↵. The status of the cutter is displayed, using the E*****F symbols described below. Continue pressing ∨ to see the status of the carriage motor, paper feed motor, print head, and cleaning unit.

The status of the ink and printer parts is indicated with these symbols:

E*****F = 100–81% ink or service life remaining
E**** F = 80–61%
E*** F = 60–41%
E** F = 40–21%
E* F = 20–11%
% = less than 10% ink or service life remaining

4. Press the ▮▮ Pause button to exit the menu.

For more information about the Printer Status menu, see your electronic *Reference Guide*.

Note: You can run a cleaning cycle by holding down the Menu button for three seconds. You can also use the printer's menus to run a power cleaning cycle. See page 98 for details.

Checking and Cleaning the Print Head

If your printed image shows a color shift or horizontal lines, you should check the print head to see if any nozzles are clogged.

You can check the print head and select the Auto Cleaning feature at the same time, using your printer utility software. This enables the printer to print a nozzle check pattern, read it, and automatically run a cleaning cycle if necessary.

1. Make sure paper is loaded in the paper tray.

2. Do one of the following to access the printer utilities:

   - **Mac OS X**: Open the EPSON Printer Utility in your Applications folder. Select SPro 4000, and click OK.
   - **Mac OS 9.x**: Select Print, then click the utility button in the print dialog box.

- **Windows XP**: Click Start and select Control Panel. Double-click Printers and Other Hardware, then double-click Printers and Faxes. Right-click your printer icon and select Printing Preferences. Click the Utility tab.
- **Other versions of Windows:** Click Start, point to Settings, then select Printers. Right-click your printer icon and select Properties (Windows 98 or Me), Document Defaults (Windows NT), or Printing Preferences (Windows 2000). Click the Utility tab.

You see a screen like the following:

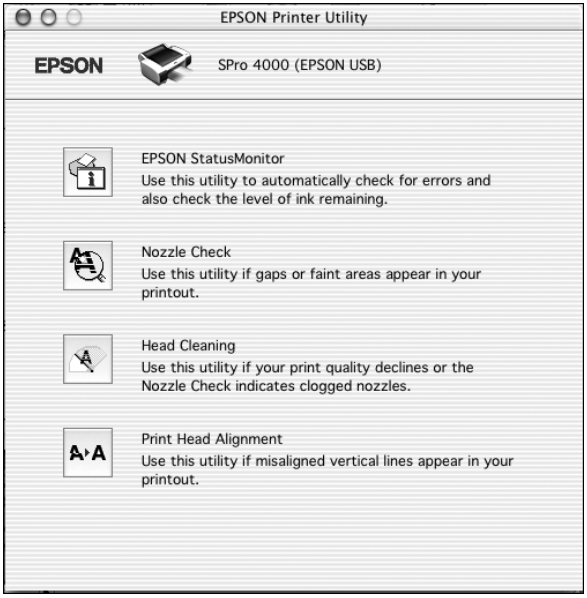

3. Click the Nozzle Check icon.
4. Click Auto and follow the instructions on the screen.

   The nozzle check pattern is printed and automatically read. If the printer finds clogged nozzles, it runs a cleaning cycle.

Running a Power Cleaning Cycle

You can run a power cleaning cycle from the control panel if the normal cleaning process is not sufficient to clear the nozzles. However, the power cycle uses a large quantity of ink, so it is recommended only as a last resort.

The cartridges need to be at least 50% full to use power cleaning. You may need to replace a low cartridge to run the cleaning cycle. After cleaning, you can reinsert the old cartridge.

1. Print a nozzle check to make sure the print head needs cleaning, as described on page 94.

Caution: Don't run a cleaning cycle while thick media is loaded in the printer.

2. Make sure the printer is ready and the red ♦ ink light on the printer's LCD panel is not on or flashing.
3. Press the Menu >/↵ button.
4. Press the ∨ button until you see MAINTENANCE, then press Menu >/↵.
5. Press the ∨ button until you see PWR CLEANING, then press Menu >/↵. Press Menu >/↵ again to start the power cleaning.
6. Follow the instructions on the LCD panel to raise or lower the ink levers.
7. When cleaning is finished and the ▮▮ Pause light stops flashing, print the nozzle check again to confirm that the head is clean.

Note: You must use at least a 10× eye loupe to check the pattern.

For effective cleaning, always run a nozzle check between cycles.

If the pattern is still missing segments after a few power cleaning cycles, turn the printer off and leave it overnight, then clean the print head again the following morning with regular cleaning cycles. If you still see no improvement, contact EPSON for assistance.

Aligning the Print Head

Aligning the print head is the most important thing you can do to ensure the best print quality. If banding appears on your prints, if they look grainy or blurry, or you see misregistration or "ghosting," you need to align the print head.

Although you can align the print head using the printer utility software, it's best to align from the control panel. This will do the most thorough job in the shortest time, and it's all automatic.

If you haven't already done so, it's a good idea to run a nozzle check before aligning the print head (page 96). This ensures that the print head alignment patterns print correctly.

Follow these steps to align the print head using the control panel:

Tip: To properly align the print head, you can use EPSON Enhanced Matte paper or Premium Luster Photo Paper.

1. Make sure the printer is turned on. Then load EPSON Enhanced Matte paper or the paper that came with the printer.
2. Press the Menu >/↵ button.
3. Press the ^ button so you see HEAD ALIGNMENT, then press Menu >/↵. You see PAPER THKNS.
4. Press the Menu >/↵ button again so that *STD appears on the display. This is the correct thickness setting for most EPSON papers, including Enhanced Matte paper.
5. Press the Menu >/↵ button to register the value, then press the < button to display PAPER THKNS again.
6. Press the v button to display ALIGNMENT.
7. Press the Menu >/↵ button to display AUTO, then press the Menu >/↵ button again. You see UNI-D (uni-directional). This is the type of alignment to start with.
8. Press the Menu >/↵ button again to start the alignment process.

It takes about 7 minutes to run the automatic uni-directional head alignment. The printer's white beam sensor reads the alignment pattern and adjusts the printer automatically. Make sure you don't open the top cover or turn off the printer during this process.

9. When the uni-directional alignment is finished, press the ^ button until you see BI-D BLACK. Then press the Menu >/↵ button again to start the bi-directional black alignment process, which is also completely automatic and takes about 7 minutes.

10. When the bi-directional black alignment is finished, press the ^ button until you see BI-D ALL. Then press the Menu >/↵ button again to start the alignment process. Again, this process is completely automatic and takes about 7 minutes.

11. When done, press the ❚❚ Pause button to exit the head alignment mode.

If you want to verify or fine-tune the automatic alignment process, you can perform a manual head alignment. See your electronic *Reference Guide* for instructions.

Replacing Ink Cartridges

Before you begin a large print job, you should check your ink levels. If one of your cartridges is low, you can replace it before you start. Or you can wait until the ink runs out, replace the cartridge, and then continue the job without any loss of print quality. However, it is best to replace a low ink cartridge before starting a large print job.

Tip: You can store partially used ink cartridges for up to 6 months.

The easiest way to check ink levels is from the control panel:

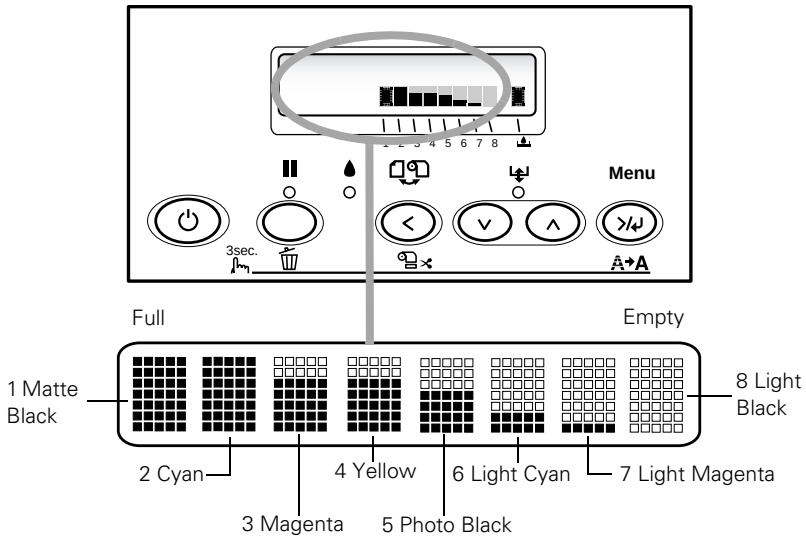

When the red ♦ ink light is flashing (and INK LOW is displayed on the LCD panel), the indicated cartridge is almost out of ink. Make sure you have a replacement cartridge. When the light stays on and INK OUT is displayed, the cartridge is empty. You must replace the cartridge before you can continue printing.

You can install any combination of 110 ml and 220 ml cartridges. It's a good idea to keep a set of empty 110 ml cartridges on hand at all times in case you need to ship the printer.

Caution: You must use the EPSON ink cartridges designed for your printer. Other ink cartridges will not work and may cause damage not covered by your warranty.

Use the following EPSON ink cartridges:

Cartridge	110 ml	220 ml*
Photo Black	T543100	T544100
Matte Black	T543800	T544800
Light Black	T543700	T544700
Cyan	T543200	T544200
Magenta	T543300	T544300
Light Magenta	T543600	T544600
Light Cyan	T543500	T544500
Yellow	T543400	T544400

* When using these cartridges, you must leave the ink compartment door open.

To order EPSON ink cartridges, contact your dealer or call EPSON at (800) 873-7766. You can also order directly from the EPSON Store at www.epsonstore.com (U.S. only). In Canada, please call (800) 463-7766 for dealer referral.

Caution: Leave the empty cartridge in the printer until you are ready to replace it.

Before you start, make sure the printer is powered on. Then follow these steps to replace an ink cartridge:

1. Note the color of the cartridge whose light is on or flashing. This is the cartridge you need to replace.

2. Press the ink compartment cover to open it.

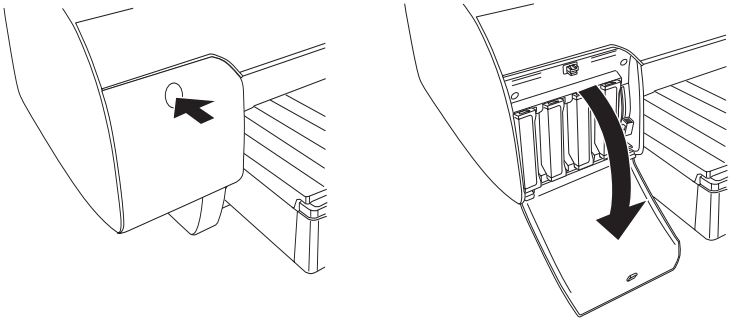

3. Raise the ink levers to the unlocked position.

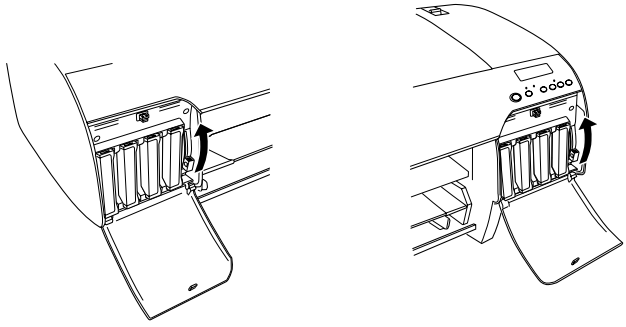

WARNING: Do not shake the empty cartridge, or ink may leak out. If ink gets on your hands, wash them thoroughly with soap and water. If ink gets in your eyes, flush them immediately with water.

4. Remove the empty ink cartridge from the printer. Make sure you save your first set of empty 110 ml cartridges, so you can use them for transporting the printer if necessary.

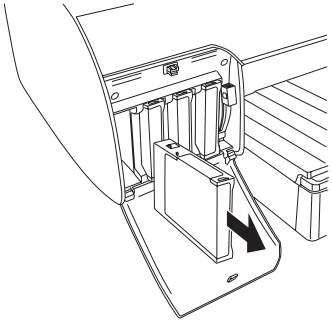

5. Make sure the replacement cartridge is the correct color, and remove it from its package.

6. Gently shake the cartridge before installing it.

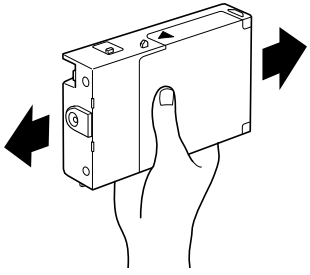

Note: If you can't insert the cartridge smoothly, you may have the wrong cartridge. Check the package and product code. If the ♦ ink light remains on after installing the cartridge, it may not be inserted fully.

7. Hold the cartridge with the arrow pointing toward the printer. Then insert the cartridge into the slot. Don't force it in.

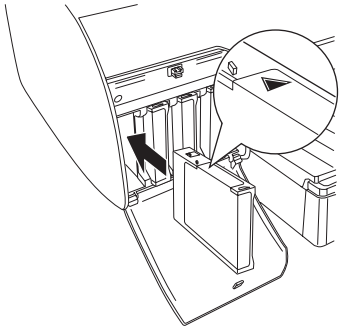

8. Lower the ink lever to its locked position.

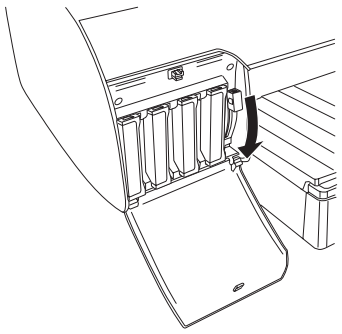

Caution: Do not remove and re-insert cartridges more often than necessary. Doing so can compromise the needle valve seal and allow air to enter the ink tubes, causing nozzle loss.

9. If you're using 110 ml cartridges, close the ink compartment cover. If you're using 220 ml cartridges, you'll have to leave the cover open.

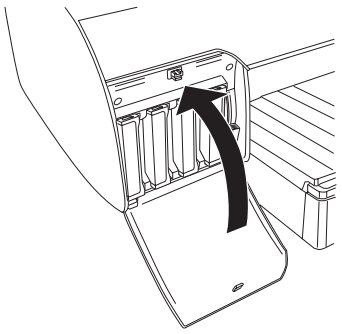

Once the cartridges are installed, the printer returns to its READY state.

Performing Additional Maintenance Tasks

In addition to running a power cleaning cycle and replacing the cutter blade, you can use the Maintenance menu to set the printer's date and time. You can also use the maintenance mode to change printer defaults and run special procedures.

Changing the Date and Time

Follow these steps to set the date and time:

1. Press the Menu >/↵ button.
2. Press the ∨ button until you see MAINTENANCE, then press Menu >/↵ again.
3. Press the ∨ button until you see CLOCK SETTINGS, then press Menu >/↵.
4. Use the ∧ or ∨ buttons to set each item in the date and time, displayed in the following format: MM/DD/YY HH:MM.

Using the Maintenance Mode

The maintenance mode allows you to make special settings and perform maintenance procedures that may be needed occasionally. You can use the maintenance mode to do the following:

- Print a hex dump for diagnosing problems
- Change the language or units of measurements used on the printer's control panel menus
- Change the default pressure setting for the automatic cutter
- Run a "super strong" cleaning cycle.
- Return all of the printer's control panel settings to their default values

Follow these steps to use the maintenance mode:

1. Make sure the printer is turned off. Press and hold the ⏸ Pause button, then press the ⏻ Power button until the printer turns on and displays HEX DUMP on the LCD panel.

2. Press the ^ or v button to select the settings described below. If you need to back up to the previous menu level, press the the < button.

   - To print a hex dump of data in the printer's buffer, press the Menu ↵ button to display EXEC. Then press Menu ↵ again to print the 16-byte hex data in the left column and corresponding ASCII characters in the right column. Press the ⏸ Pause button to print the last page.
   - To change the language displayed on the LCD panel, press the v button until you see LANGUAGE, then press the Menu ↵ button. Press the v button until you see the language you want, then press Menu ↵ again to select it. The printer exits maintenance mode and returns to normal operation.
   - To change the units of measurement, press the v button until you see UNIT, then press the Menu ↵ button. Press the v button to switch from METER to FEET/INCH, then press Menu ↵ to select the units you want. Press the the < button when done.
   - To change the default cutting pressure, press the v button until you see CUT PRESSURE, then press the Menu ↵ button to display 100%. Press the v button to decrease the presure, or the ^ button to increase it (in 1% increments). Press Menu ↵ to select the setting you want.
   - To run a super strong cleaning cycle, press the v button until you see SSCL, then press the Menu ↵ button to display EXEC. Press Menu ↵ to start the cleaning cycle.
   - To return all control panel settings to their default values, press the the ^ button until you see DEFAULT PANEL, then press the Menu ↵ button to display EXEC. Press Menu ↵ again to restore the default settings.

3. To exit the maintenance mode, turn off the printer by pressing the ⏻ Power button. Press the ⏻ Power button again to turn on the printer in the normal operating mode.

Replacing the Paper Cutter Blade

Note: You can purchase replacement items for your printer from EPSON at (800) 873-7766, or by visiting the EPSON Store at www.epsonstore.com (U.S. sales only). In Canada, please call (800) 463-7766 for dealer referral.

If you notice that your paper isn't being cut cleanly, the cutter blade may need to be replaced. If you use the blade to cut heavy stock, you will damage the blade and need to replace it. See page 32 for a list of media that do not work with the cutter.

You can check the status of your cutter by printing the status check sheet or viewing its status on the control panel. See page 95 for instructions.

You can obtain a new cutter blade from EPSON (part number C12C815291).

Make sure the printer is on, then follow these steps to replace the blade:

Caution: Do not try to slide the carriage by hand, or you may damage the printer.

1. Press the Menu >/↵ button.
2. Press the ∨ button until you see MAINTENANCE, then press Menu >/↵ again. You see CUTTER REPL.
3. Press Menu >/↵ to display EXEC.
4. Press Menu >/↵ again. The print head moves to the replacement position. OPEN TOP COVER is displayed.
5. Open the top cover.

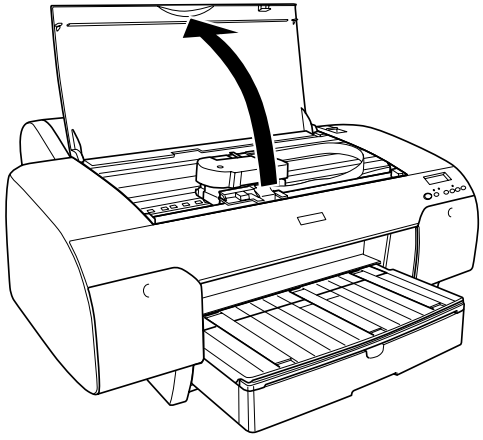

6. When REPLACE CUTTER is displayed on the LCD, hold down the side pin as shown and turn the latch to the right.

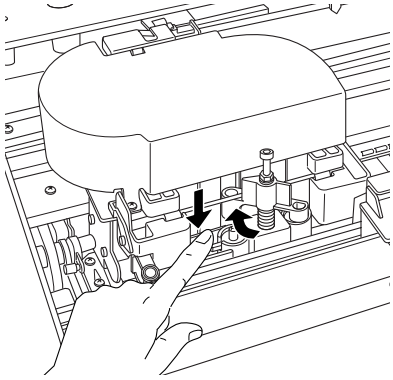

WARNING: The blade is sharp. Be careful when removing it.

7. Release the side pin and carefully remove the cutter blade.

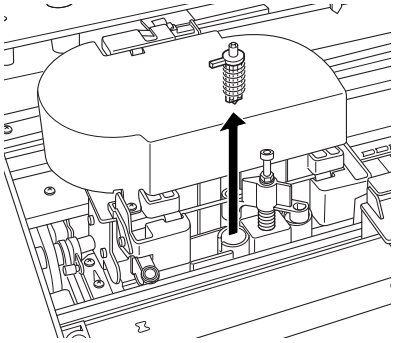

8. Insert the new cutter as shown.

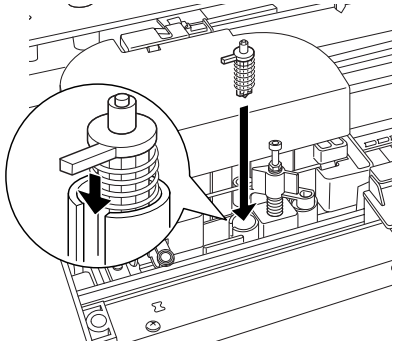

9. Push down on the side pin while turning the latch to the left.

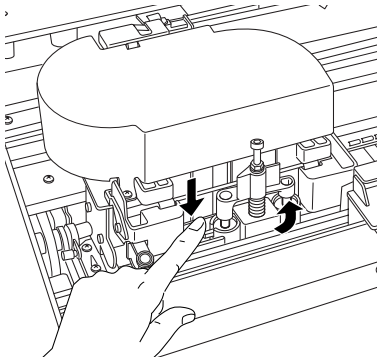

10. Close the top cover when you see a message prompting you to do so. The cutter moves to the home position.

Replacing the Maintenance Tank

The maintenance tank stores ink that gets flushed from the system during manual and automatic print head cleaning. When the tank is almost full, the message MNT TK NEAR FULL appears on the LCD panel. When the tank is completely full, the printer stops working and MNT TK FULL appears on the LCD.

You can check how much space remains in the maintenance tank by viewing its indicator on the control panel, shown below. You can also check its status using the SelecType menu (see page 95) or by printing a nozzle check sheet (see page 94).

Note: You can purchase replacement items for your printer from EPSON at (800) 873-7766, or by visiting the EPSON Store at www.epsonstore.com (U.S. sales only). In Canada, please call (800) 463-7766 for dealer referral.

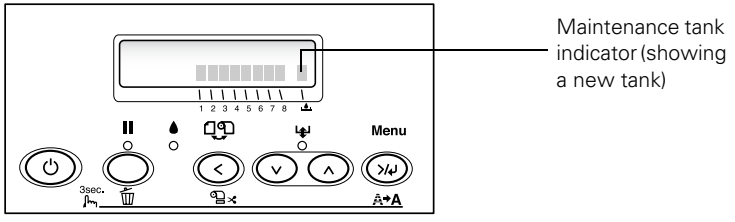

Replacement tanks are available from EPSON (part number C12C890071).

Follow these steps to replace the tank:

1. Make sure the printer is not printing or performing any other operations (READY or PAPER OUT should appear on the control panel).

2. If you are using 220 ml ink cartridges, remove the four cartridges from the right ink compartment, then close the compartment cover.

3. Place your hand under the right ink compartment and gently pull out the maintenance tank.

Caution: Be careful not to spill ink from the maintenance tank when removing it. Hold it upright at all times and dispose of it carefully.

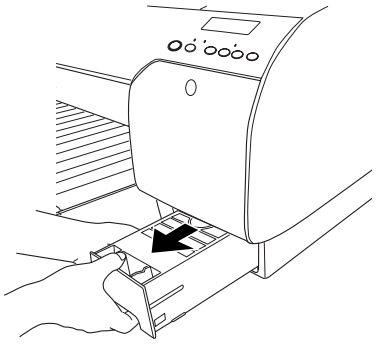

4. Place the used tank in the plastic bag included with the new tank.

5. Insert the new tank.

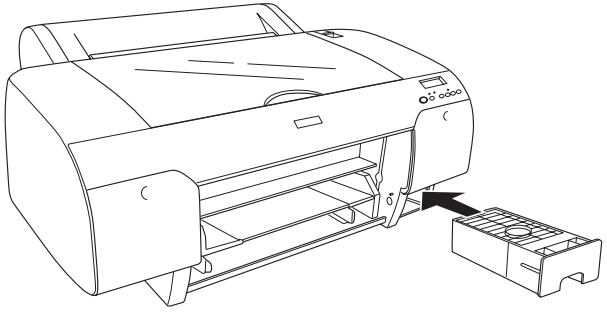

6. If you removed any ink cartridges, replace them after inserting the new maintenance tank.

Cleaning the Printer

Caution: Be careful not to touch the gears inside the printer.

To avoid damaging the components as well as the case, never use alcohol or thinners to clean the printer.

Be careful not to get water on the printer mechanism or electronic components.

Don't use a hard or abrasive brush.

Don't spray the inside of the printer with lubricants; unsuitable oils can damage the mechanism. Contact EPSON if you think the printer needs lubrication.

To keep your printer working at its best, you should clean it several times a year.

1. Make sure the printer is turned off and all its lights are off. Then unplug the power cord and disconnect the printer from your system.
2. Open the roll paper cover and remove the roll paper. Remove any sheets from the paper tray. Use a soft brush attachment to vacuum the paper tray.
3. If the paper path accidentally gets soiled with ink, gently clean it with a soft, lint-free cloth dampened with water.
4. If the outer case is dirty, clean it with a soft, clean cloth dampened with mild detergent. Keep the ink cartridge compartment closed to prevent water from getting inside.

Transporting or Storing the Printer

WARNING: The printer weighs about 85 lb (without ink), and should be lifted by two people.

If you are moving the printer a short distance (for example, in the same building), raise the ink levers and have at least two people lift the printer.

To ship the printer, you must repack it using the original box and packing materials and secure it to a pallet. If you do not have these items, contact EPSON to request them. Otherwise, the printer may be damaged beyond repair.

If your printer includes the EpsonNet Ethernet card, you must remove it before shipping the printer for repairs. See page 134 for instructions.

Preparing the Printer for Shipment

1. Turn the printer on and remove the following parts:
   - All paper or other media
   - Roll paper spindle
   - Paper tray
2. If you are using the 110 ml ink cartridges, leave them installed. If you are using 220 ml cartridges, remove them and install 110 ml cartridges.

   If you have the original cartridges that came with the printer (even if they are empty), install them before shipping the printer.

   To store partially used cartridges removed from the printer, tape over the needle valve hole and place each cartridge in a separate, resealable plastic bag. Be sure to remove the tape before reinstalling the cartridges. The printer must be powered on when removing or installing ink cartridges.

Caution: To avoid spilling ink and damaging the printer, you must leave the cartridges in place, raise the ink levers, and lock the print head.

3. Raise the ink levers.

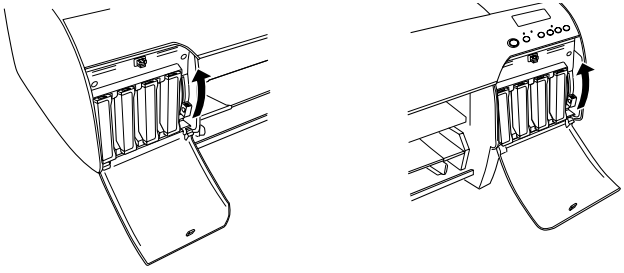

4. Make sure the print head is in the home (far right) position. Then lock the print head by pushing the green tab to the right.

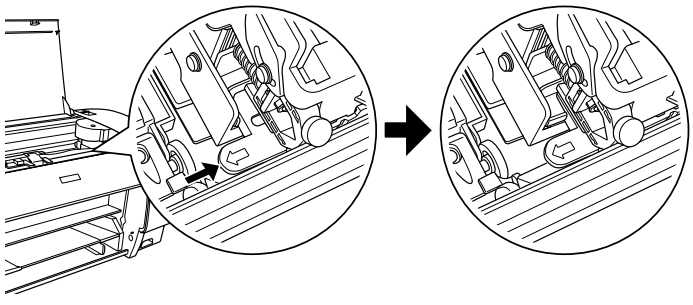

Caution: Do not turn off the printer by unplugging it or turning off a power strip. You will not be able to lock the print head, and ink will leak out of the reservoir, damaging the printer.

5. Turn off the printer and unplug the power cord.
6. If you need to ship the printer, you must repack it using the original box and packing materials and secure it to a pallet. If you do not have these items, contact EPSON to request them. Otherwise, the printer may be damaged beyond repair.

   If you are transporting the printer in your own vehicle without the original packaging, make sure you wrap and pack the printer securely. Transport the printer in a horizontal position on a flat, stable surface.
7. Keep the printer level while moving it.

Caution: Make sure you release the print head by pulling out the green tab.

Setting Up the Printer After Transportation

Setting up the printer after transporting it is almost identical to setting it up for the first time, as described on the *Start Here* sheet.

Keep in mind that the first time you start printing after moving the printer, the print head nozzles may be clogged—especially if the printer hasn't been turned on for a long time. You may need to run a cleaning cycle (page 96) and realign the print head (page 99) to ensure good print quality.

If you see the message PERFORM POWER CLEANING? on the LCD panel after setting up the printer, select Y to start the power cleaning process, as described on page 98.

Uninstalling and Reinstalling the Printer Driver

If you need to uninstall and then reinstall the printer driver software for any reason, follow the instructions in the appropriate section below.

Macintosh

1. Insert your printer software CD-ROM. Then double-click the CD-ROM icon to open it, if necessary.
2. Double-click the Installer program to open it.
3. Double-click Install Printer Driver and Utilities.
4. Enter your password if necessary.

5. Click Continue on the next screen.
6. Click Accept on the license agreement screen.
7. On the installer screen, click the arrow in the Easy Install list at the top and select Uninstall. Then click the Uninstall button at the bottom and follow the on-screen instructions.
8. If you want to reinstall your printer software, restart your Macintosh. Then follow the instructions on the *Start Here* sheet to install the software.

Tip: Check the EPSON Pro Graphics website at http://prographics.epson.com for updated drivers and utilities that may become available.

Windows

1. On Windows XP, click Start > Control Panel.

   On other versions of Windows, double-click My Computer, then double-click the Control Panel icon.
2. Double-click Add/Remove Programs. Click EPSON Printer Software in the program list, then select your printer icon.
3. Click the Change/Remove or Add/Remove button and follow the on-screen instructions.
4. If you're using the USB port in Windows 98 or Me, click EPSON USB Printer Devices in the program list; then click the Add/Remove button.
5. If you want to reinstall your printer software, restart your computer. Then follow the instructions on the *Start Here* sheet to install the software.

Chapter 5: Solving Problems

As you use your printer, you may occasionally experience a problem. The first thing you should do is diagnose the problem following the guidelines in this chapter. Then try the most likely solutions until the problem is fixed.

This chapter provides instructions for the following:

- Diagnosing problems
- Checking error messages and lights
- Improving print quality
- Solving operational problems
- Solving miscellaneous printing problems
- Solving paper problems, including clearing paper jams

Diagnosing Problems

The EPSON Stylus Pro 4000 includes a number of ways to help you diagnose problems:

- To identify the most common problems, check the messages and lights on the control panel. See page 116 for more information.
- If you're using the EPSON printer driver and Status Monitor utility, check your software for error messages. See Chapter 3 or 4 for more information.
- To determine whether the problem is caused by the printer itself, disconnect the printer from your computer and run a nozzle check from the control panel. See page 94 for instructions.
- If none of the suggested solutions in this chapter solve your problem, contact EPSON as described under "Where To Get Help" on page 11.

Checking Error Messages and Lights

The control panel includes various lights and an LCD display to indicate the status of the printer:

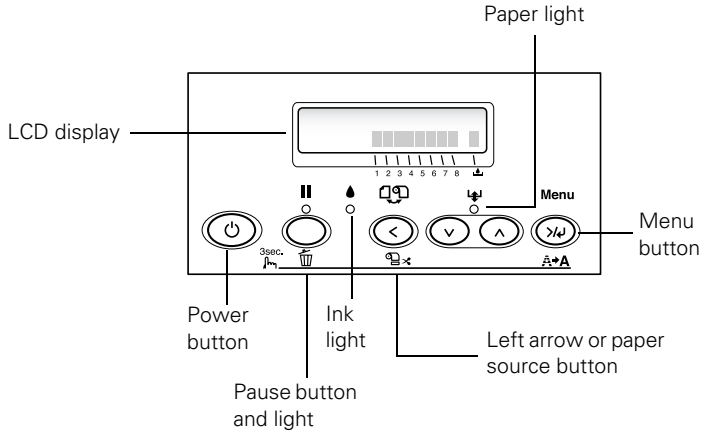

When your ink or paper runs out or a problem occurs, a message appears on the LCD display, and the lights on the control panel come on or flash. The following table lists the messages in alphabetical order and includes an explanation and instructions for correcting the problem.

Message	Light	Explanation	Response
CHANGE PAPER TYPE	Paper light on	Paper loaded does not match the source selected.	Press the < Paper Source button to select the correct setting: either (for paper in the tray, or or for roll paper).
COMMAND ERROR	—	You're using the wrong printer driver.	Press the Pause button and hold it for 3 seconds to cancel the print job. Make sure you installed the correct driver for your printer.
		Damaged data was sent to the printer.	Press the Pause button and hold it for 3 seconds to cancel the print job.
FEED SHEET PAPER FEED SHEET PAPER MANUALLY	—	Cut sheet needs to be loaded manually.	Load the sheet in the manual feed slot. See page 27 for instructions.
FORBIDDEN MEDIA FROM P. TRAY	—	Cut sheet needs to be loaded manually.	Load the sheet in the manual feed slot. See page 27 for instructions.

Message	Light	Explanation	Response
INK LOW	Ink light flashing	Ink cartridge(s) are nearly empty (printing continues).	Make sure you have replacement cartridges available. See page 100.
INK OUT	Ink light on	Ink cartridge(s) are empty (printing stops).	Replace the ink cartridge(s) indicated on the LCD panel. See page 100 for instructions.
INVALID INK CARTRIDGE	Ink light on	You tried to install the wrong ink cartridge.	If you are installing ink cartridges for the first time, you must install the cartridges that came with your printer. If you are replacing ink cartridges, check the package and product code. You must use the ink cartridges designed for your printer. Other cartridges will not work.
LOAD PAPER	Paper light on	Paper lever is in the released position while loading paper.	After you finish loading paper, pull the paper lever all the way forward, to the secured position.
LOAD ROLL PAPER LOAD SHEET PAPER IN P. TRAY	Paper light on	Paper source setting in printer software is different from control panel.	Make sure the right paper is loaded and the paper source setting is the same on the control panel and printer software.
LOWER INK LEVERS LOWER L (or R) INK LEVER	—	One or both ink levers are raised.	Pull the lever or levers down to lock the ink cartridges.
MNT REQ.	—	A printer part will need to be replaced soon.	Note the code number and contact EPSON as described on page 11.
MNT TNK NEAR FULL	—	The maintenance tank is almost full.	Make sure you have a replacement maintenance tank. See page 109.
MNT TNK FULL	Ink light on	The maintenance tank is full.	Replace the maintenance tank. See page 109 for instructions.
NO BORDERLESS WITH THIS SIZE	—	Borderless setting selected for A2-size sheets (11.7 × 16.5)	Change the setting in the printer driver, or load different-size paper.
NO MNT TNK	—	The maintenance tank is not installed.	Make sure the maintenance tank is fully inserted. See page 109 for instructions.
NOT STRAIGHT RELOAD	Paper light on	Cut sheet paper is not loaded straight.	Load the paper correctly.

Message	Light	Explanation	Response
NOZZLES STILL CLOGGED	—	Head cleaning did not clear the nozzles.	Run the head cleaning utility again. If the nozzles are still clogged, contact EPSON.
OPTION I/F ERROR	—	Wrong interface card installed.	Turn off the printer and remove the card. See the documentation that came with the card.
NO INK CARTRIDGE	♦ Ink light on	Ink cartridge(s) not installed or ink lever raised.	Install ink cartridges (page 100) or lower the ink lever.
PAPER JAM	Paper light flashing	Paper has jammed in the printer.	Remove the jammed paper. See page 127 for more information.
PAPER NOT CUT	Paper light flashing	Roll paper was not cut correctly.	Open the top cover and remove the uncut paper. Reload paper if necessary.
		The cutter may be blunt or incorrectly installed.	Reinstall or replace the cutter blade if necessary, as described on page 107.
PAPER NOT STRAIGHT	Paper light flashing	Paper slipped and fed into the printer at an angle.	Reload paper, making sure the edges are straight.
PAPER OUT	Paper light on	No paper is loaded.	Load paper.
		Paper ran out.	Remove any printouts or paper remaining in the printer and load more paper. If the message appears during a print job, reset the printer by pressing the **Pause** button for 3 seconds. Then load paper and resend the job.
REAR COVER OPEN	—	The rear cover has been removed.	Replace the rear cover.
RELOAD PAPER	Paper light on	Printer cannot detect paper.	If you are using cut sheets, make sure the paper is flat. Move the paper lever.
		PAPER NOT CUT error was cleared.	Reload paper.
RELOAD PAPER INSERT DEEPLY	Paper light on	Manually loaded sheet is not inserted far enough.	Insert the sheet further into the printer. See page 27 for instructions.
REMOVE PAPER	Paper light on	Paper is too thick for head cleaning.	Pull the paper lever out to remove the paper. Head cleaning automatically starts. After cleaning, reload paper.
		Printer could not feed the printed page.	Remove the print.

Message	Light	Explanation	Response
SERVICE REQ.	All lights flashing	The print head is locked.	Pull out the green tab to unlock the print head. See page 111.
		An error has occurred.	Note the error number, then turn the printer off and back on. If the message remains, contact EPSON as described on page 11.
SET INK CRTG	—	Ink cartridge chip error.	Remove and reinstall the ink cartridge. If the message remains, replace the cartridge.
SET PAPER LEVER	Paper light on	Paper lever was released during the printing process or another operation.	Pull the lever all the way forward, to the secured position. Start printing again from the beginning for best results.
TOP COVER OPEN	—	Top cover is open.	Close the top cover.
UNABLE TO PRINT	—	You tried to print while an error condition was present.	Press the Pause button to exit the SelecType menu system. If the message appears again, clear the error before you print.
WRONG INK CARTRIDGE	Ink light on	You tried to install the wrong ink cartridge.	If you are installing ink cartridges for the first time, you must install the cartridges that came with your printer. If you are replacing ink cartridges, check the package and product code. You must use the ink cartridges designed for your printer. Other cartridges will not work.
WRONG PAPER SIZE	Paper light flashing	Loaded paper does not match the image size.	Make sure the size you selected in the printer driver matches the loaded paper size. Load the correct size paper if necessary.

Improving Print Quality

You can often improve print quality by doing the following:

- Run a nozzle check and cleaning cycle. See page 96 for instructions.
- Align the print head. See page 99 for instructions.
- When you send a print job, make sure your print options are set correctly. For more information, see Chapter 3 (Macintosh) or 4 (Windows).

If none of these suggestions help, try the solutions below.

Problem	Solution
Your print has horizontal banding.	◗ Check the ink indicators and light to see if you are low on ink. Replace ink cartridges if necessary, as described on page 100. ◗ Run a nozzle check and cleaning cycle. See page 96 for instructions. ◗ Align the print head from the printer's control panel, as described on page 99. ◗ Turn off **High Speed** in your Advanced settings. ◗ Make sure the **Media Type** setting in the printer software is correct for the media you're printing on. ◗ If you're using cut sheet media, make sure the printable side is face down in the tray. ◗ Choose a higher resolution, such as **SuperPhoto - 2880dpi**. ◗ If you're using a third-party RIP and non-EPSON media, see if the RIP provides a method for adjusting the paper feed. Try adjusting your paper configuration settings (page 51 for Mac OS X, page 67 for Mac OS 9, or page 86 for Windows). Check these settings: ◗ Make sure the **Paper Thickness** setting is correct for the paper you're printing on. ◗ If you're printing on thin paper that's getting saturated with ink, reduce the **Paper Suction**. ◗ Use the **Paper Feed Adjustment** to tune out banding. Reduce the value for white lines, and increase it for overlapping dark lines. ◗ If you've created a custom paper configuration, be sure to return the setting to standard (**STD**) when you're done using it. See page 41.

Problem	Solution
Your print is grainy, or has misregistration or ghosting.	◗ Check the ink indicators and light to see if you are low on ink. Replace ink cartridges if necessary, as described on page 100. ◗ Run a nozzle check and cleaning cycle. See page 96 for instructions. ◗ Align the print head, as described on page 99. ◗ Make sure the **Media Type** setting in the printer software is correct for the media you're printing on.
	◗ If you're using cut sheet media, make sure the printable side is face down in the tray. ◗ Choose a higher resolution, such as 2880 dpi. ◗ Turn off **High Speed** in your Advanced settings. You may need to adjust your paper configuration settings (page 51 for Mac OS X, page 67 for Mac OS 9, or page 86 for Windows). Check these settings: ◗ Make sure **Paper Thickness** setting is correct for the paper you're printing on. ◗ If you've created a custom paper configuration, be sure to return the setting to standard (**STD**) when you're done using it. See page 41.
Colors are incorrect or missing.	◗ Make sure the **Media Type** setting in the printer software is correct for the media you're printing on. ◗ If you are using the color management features in Photoshop or another application, you must turn off color management in the printer driver. See page 50 (Mac OS X), page 66 (Mac OS 9), or page 85 (Windows). ◗ Adjust the **Color Density** setting in the Paper Configuration utility. ◗ If you're using a third-party RIP or non-EPSON media, custom color profiles will give you the best color reproduction. ◗ If you're using cut sheet media, make sure the printable side is face down in the tray. ◗ Run a nozzle check and cleaning cycle (see page 96). ◗ Check the expiration date printed on each of the ink cartridges. If the cartridge is too old, replace it as described on page 100. ◗ Check the ink indicators and light, and replace ink cartridges if your ink supply is low, as described on page 100. ◗ Make sure color settings in your application or printer software are correct.

Problem	Solution
Your print has gaps or appears faint.	◗ Check the expiration date printed on each of the ink cartridges. If the cartridge is too old, replace it as described on page 100. ◗ Make sure the Media Type setting in the printer software is correct for the media you're printing on. ◗ Run a nozzle check and cleaning cycle (see page 96). ◗ Check the ink indicators and light and replace ink cartridges if your ink supply is low, as described on page 100. ◗ The paper thickness setting is not correct for the paper you're printing on. Use your printer software (page 51 for Mac OS X, page 67 for Mac OS 9, or page 86 for Windows) to choose the correct setting. When you're done printing with a custom paper configuration, be sure to return the setting to standard (STD). ◗ The platen gap setting is too wide. Use the Menu system to change the setting to STANDARD, or to NARROW if printing on very thin paper. See page 39 for instructions.
Your print appears blurry or smeared.	◗ Make sure the Media Type setting in the printer software is correct for the media you're printing on. ◗ If you're printing on non-EPSON media, you may need to adjust the paper thickness setting, drying time, or color density. Use your printer software (page 51 for Mac OS X, page 67 for Mac OS 9, or page 86 for Windows) to choose the correct setting. When you're done printing with a custom paper configuration, be sure to return the setting to standard (STD). ◗ Your paper doesn't meet the required specifications or wasn't stored in a dry, humidity-free environment. Load new paper. ◗ If you're using cut sheet media, make sure the printable side is face down in the tray. ◗ Ink has leaked into the paper path. Wipe the paper path area of the printer with a soft, clean cloth. See page 111 for cleaning instructions. ◗ Turn off High Speed in your Advanced settings. ◗ The platen gap setting is too narrow. Use the control panel to change the setting to WIDE or WIDER. See page 39 for instructions. ◗ Run a nozzle check and cleaning cycle (see page 96).

Problem	Solution
The bottom edge of your print is smeared.	◗ The paper is curled toward the printable side. Flatten the paper or curl it toward the other side. ◗ Make sure the **Media Type** setting in your printer software is correct for the media you're printing on. ◗ If you're printing on non-EPSON media, you may need to adjust the paper thickness setting or drying time. Use your printer software (page 51 for Mac OS X, page 67 for Mac OS 9, or page 86 for Windows) to choose the correct setting. When you're done printing with a custom paper configuration, be sure to return the setting to standard (**STD**). ◗ If printing on thick paper, the platen gap setting may be incorrect. Use the control panel to change the setting to **WIDE** or **WIDER.** See page 39 for instructions.

Solving Operational Problems

If you can't turn the printer on, if it stops printing unexpectedly, or if nothing prints, check the following:

- The printer is turned on.
- Paper is loaded in the printer.
- The printer is plugged securely into a working electrical outlet that's not controlled by a switch or timer.
- The interface cable is securely connected to the printer and your system.
- The voltage supplied by the electrical outlet matches the voltage on the printer's rating label. If not, turn off the power and unplug the power cord immediately. Contact EPSON for assistance. (See page 11 for details.)

If none of these suggestions help, try the solutions on the following page.

Problem	Solution
The printer stops printing unexpectedly.	◗ If the ▮▮ Pause light is flashing, the printer is performing a maintenance procedure or waiting for ink to dry. Check the display message and lights on the control panel. Wait until the ▮▮ Pause light stops flashing. ◗ Check the display message and lights on the control panel to see if an error has occurred. Follow the instructions for the messages beginning on page 116.
The printer sounds as if it's printing, but nothing prints.	◗ Follow the instructions beginning on page 96 to clean the print head. ◗ Communication between the computer and printer may have been momentarily interrupted. Try restarting the computer and printing again.
Nothing prints.	◗ Turn off the printer and computer. Make sure the interface cable is securely plugged in. Then restart the printer and computer. ◗ Make sure the interface cable meets the required specifications. See page 11 or 12. ◗ Make sure the interface cable is directly connected to the computer without passing through a printer switching device, Zip™ drive, or extension cable. ◗ The printer port setting doesn't match the printer connection port (Windows). **Windows Me or 98:** Click Start > Settings > Printers. Right-click the icon for your printer, then select Properties. Click the Details tab. Make sure your printer driver is selected in the Print using the following driver list. Then select the port to which your printer is connected in the Print to the following port list. **Windows XP:** Click Start > Control Panel > Printers and Other Hardware > Printers and Faxes. Right-click the icon for your printer, then select Properties. Click the Ports tab and make sure your printer port is selected. **Windows 2000 or NT 4.0:** Click Start > Settings > Printers. Right-click the icon for your printer, then select Properties. Click the Ports tab and make sure your printer port is selected. ◗ The printer driver doesn't have enough available memory (Macintosh). Quit all unnecessary applications. To increase the available memory in your Macintosh, select Control Panel from the Apple menu and double-click the Memory icon (Mac OS 9). You can increase the size of virtual memory to increase total available memory. ◗ Follow the instructions beginning on page 113 to uninstall your printer software. Then locate your printer software CD-ROM and reinstall the software. You can also download and install the latest driver for Macintosh or Windows from the EPSON website at http://prographics.epson.com.

Solving Miscellaneous Printing Problems

If your printouts are not what you expected, try the suggestions below:

Problem	Solution
Your print has incorrect or garbled characters.	◗ Make sure your software is installed correctly and the printer is selected. ◗ Clear any stalled print jobs from the Print Center or Printer Setup Utility (Mac OS X), Monitor IV (Mac OS 9), or Spool Manager (Windows 98 or Me). ◗ Turn off the printer and computer. Make sure the interface cable is securely plugged in at both ends.
Your print has incorrect margins.	◗ Check the page size or paper size settings in your application. Make sure they are within the printer's printable area. ◗ Make sure the **Paper Size** and **Borderless** settings in your printer software are correct for the paper you're using. ◗ Paper is loaded incorrectly. Follow the instructions in Chapter 1 to reload the paper. ◗ The **PAPER MARGIN** (roll paper margin) setting on the PRINTER SETUP menu is incorrect. If you're using roll paper, check the setting for **PAPER MARGIN**. See the on-screen *SP 4000 Reference Guide* for more information.
Your image is inverted.	◗ Turn off the **Flip Horizontal** setting in your printer software. See page 49 (Mac OS X) page 66 (Mac OS 9) or page 84 (Windows) for instructions.
Blank paper is printed.	◗ Make sure your software is installed correctly and the printer is selected. ◗ Make sure the **Paper Size** setting in your printer software is correct for the paper you're using. ◗ Make sure the **Paper Source** setting in your printer software is correct.
A ruled line on your print appears to shift.	◗ Align the print head as described on page 99.
Color images print in black only.	◗ Make sure **Color/B&W Photo** is selected in your printer software.
The printer continues to feed paper after you have cancelled a job.	◗ Press the ❚❚ Pause button on the printer to clear any print job data in the printer's buffer. Then press and hold the ❚❚ Pause button to reset the printer.
Roll paper cannot be cut.	◗ The paper cutter blade may be dull. Follow the instructions on page 107 to replace the blade. ◗ The paper may be too thick to cut with the built-in cutter. Cut the paper with scissors. See page 32 for a list of media that cannot be used with the cutter. ◗ Make sure appears on the LCD panel. If not, press the < Paper Source button to select this setting.

Problem	Solution
Printing is too slow.	◗ Turn on **High Speed** in your Advanced settings. ◗ Choose a lower resolution in your printer software for faster printing. ◗ Clear space on your hard drive or run a defragmentation utility. ◗ Don't run too many applications at the same time. ◗ Turn off virtual memory. ◗ Add RAM to your system. ◗ If you're using Macintosh, turn off background printing. If you want to continue using background printing, select **EPSON Monitor IV** (Mac OS 9) and increase its memory requirements. ◗ Consider upgrading your system to support a faster connection to the printer: either IEEE 1394 FireWire or USB 2.0.

Solving Paper Problems

If paper feed or paper jam problems occur frequently, try one or more of the following solutions:

- For roll paper, try adjusting the paper suction setting. See page 40 for more information. You can also adjust this setting through your printer driver.
- For heavy or thick media, follow the instructions on page 27 to load the media correctly.
- Make sure the paper is not folded, wrinkled, or damp.
- Make sure the printer's environment falls within the required temperature and humidity range.
- Make sure the paper is not too thick or too thin. See pages 17 and 138 to 139 for paper specifications.
- Make sure no foreign objects are inside the paper path.
- Make sure the printer isn't located in a brightly lit area. The paper sensors may not operate correctly.
- Make sure the **Media Type** and **Paper Source** settings in the printer software are correct.

- Make sure the platen gap setting is correct for the paper or media you're printing on. See page 39 for more information.
- If you're not using EPSON media, make sure you use a paper configuration to adjust for the paper's thickness and drying time (see page 41).
- If roll paper is curled tightly, select Starwheel-Roll Curled as the Feed Roller Type in your paper configuration settings.

Clearing Roll Paper Jams

When roll paper gets jammed in the printer, printing stops and you see a PAPER JAM message on the LCD display. Follow these steps to clear a paper jam:

Caution: To avoid damaging the printer, never move the paper lever while the ▮▮ Pause light is flashing.

1. Turn off the printer, open the roll paper cover, and release the paper lever.

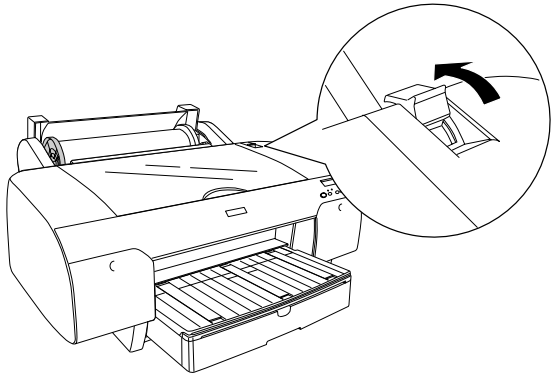

2. Cut the paper at the paper insertion slot, and remove the roll paper.

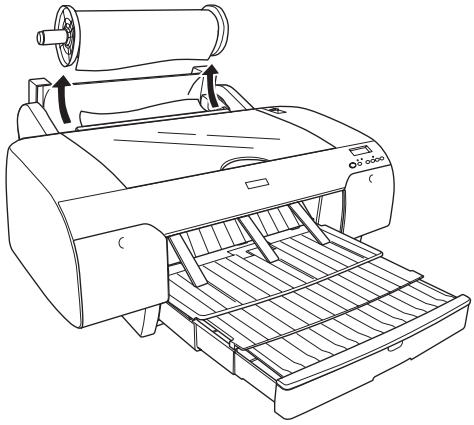

3. Remove the jammed paper from the front or back of the printer.

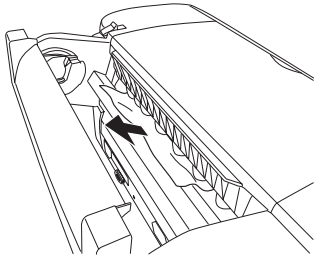

Caution: Be careful not to damage the print head when you pull out the paper.

4. If necessary, open the top cover and remove the jammed paper.

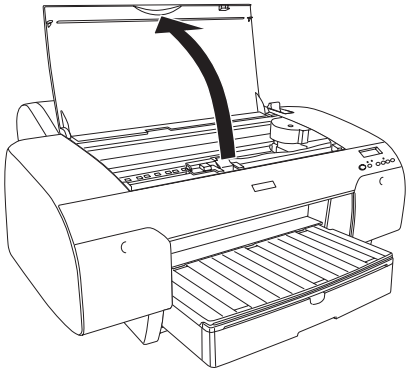

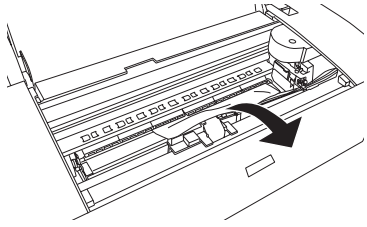

5. Make sure the ↵ paper light is on and LOAD PAPER is displayed on the LCD panel. Then reload your paper.

Clearing Paper Tray Jams

If paper gets jammed while feeding from the tray, follow these steps to clear it:

1. Turn off the printer and release the paper lever.

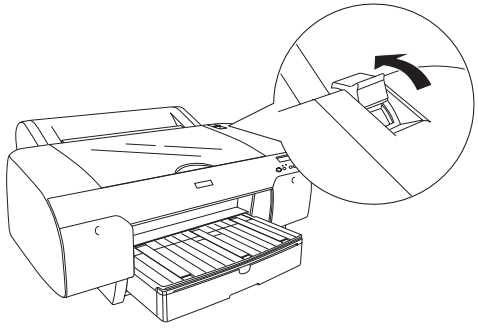

2. Remove the paper tray.

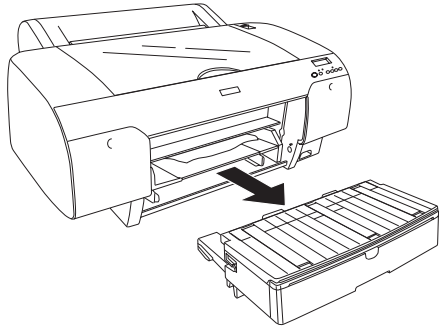

3. Carefully pull out the jammed paper.

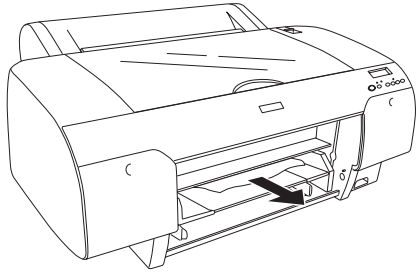

4. If paper is still jammed in the printer, open the top cover and remove it.

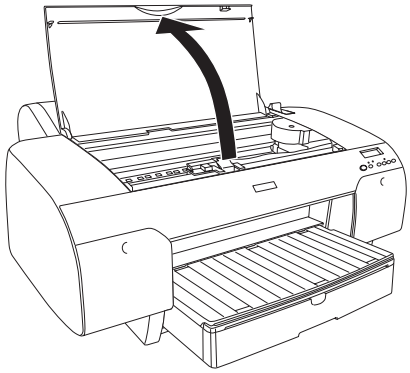

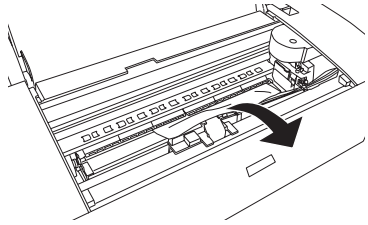

5. If paper is jammed around the rear cover, remove the cover by squeezing the square knobs and pulling the cover off the printer.

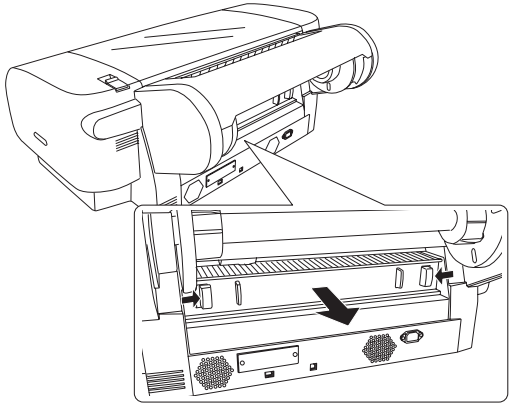

6. Then remove the paper.

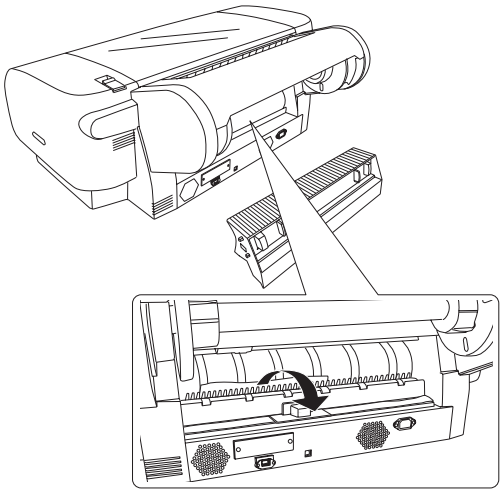

7. Reinstall the rear cover. Then press and hold the ▮▮ Pause button if necessary to reset the printer.

Clearing Paper Jams from the Manual Feed Slots

If paper is jammed in the front or rear manual feed slots, follow these steps to clear it:

1. Turn off the printer and release the paper lever.

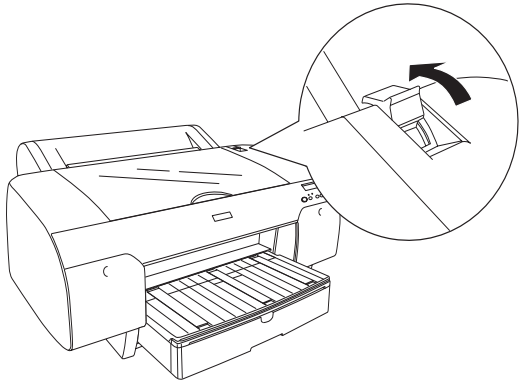

2. Remove the paper tray.

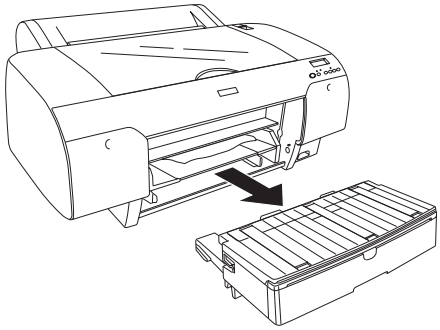

3. Carefully pull out the jammed paper.

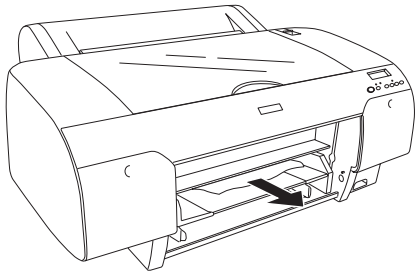

4. If you can't reach the paper from the front, remove it from the back of the printer.

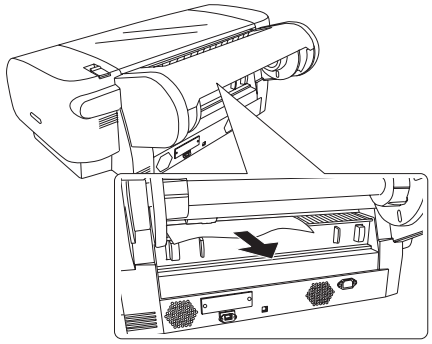

5. Press and hold the ❚❚ Pause button if necessary to reset the printer.

Appendix A: Installing the Optional Print Server Card

If you plan to attach the printer to your network, you need the optional EpsonNet print server card. The EpsonNet print server is a 10/100 Base TX Type B Ethernet interface card (part number C12C82405).

You can purchase the print server card and other optional equipment and and supplies from EPSON at (800) 873-7766, or you can visit the EPSON Store at www.epsonstore.com (U.S. sales only). In Canada, please call (800) 463-7766 for deaer referral.

Make sure you have the correct cable for connecting the printer. To connect to a network hub, you need a standard RJ-45 "straight-through" network cable. To connect directly to your computer's network interface, you need an RJ-45 crossover cable.

Before you install the print server, make sure you check the documentation included with the card for additional instructions. Then follow these steps to install the card:

Caution: You *must* unplug the printer from the power outlet, or you may damage the printer and the card.

1. Turn off your computer and printer.
2. IMPORTANT: Unplug the printer from its electrical outlet. Not doing so may cause damage to the printer and the card.
3. Disconnect any interface cables from the printer.
4. Use a cross-head screwdriver to remove the two screws securing the optional interface cover. Then lift off the cover as shown:

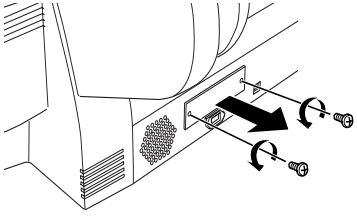

Make sure you keep the screws in case you need to remove the card and replace the cover.

5. Slide the card along the slots inside the compartment. Push it in firmly to fully insert the connector into the printer's internal slot.

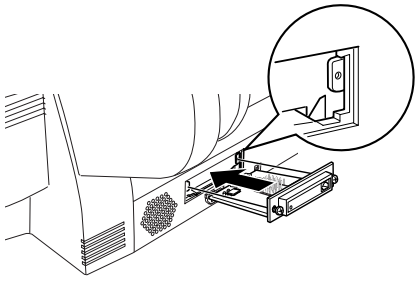

6. Use the two screws included with the card to secure it.
7. Connect one end of the appropriate cable to the card. Then connect the other end to your computer's Ethernet port or hub.
8. Plug in the printer's power cord.

Once the printer is connected to your network, you need to configure it. Turn on the printer and press the small black button on the back of the Ethernet card. Hold it down until the printer starts printing a series of status sheets. See the documentation that came with the print server for instructions on configuring it for your network.

Removing the Print Server Card

WARNING: The card will be hot after printing. Make sure you allow the card to cool before handling it.

If you need to exchange your printer, you must remove the Ethernet card.

1. Turn off the printer and disconnect the power cord.
2. Disconnect the Ethernet cable.
3. Remove the two screws securing the card.
4. Make sure the card is cool before pulling it out of the slot.

Appendix B: Specifications

Note: Additional specifications are provided in the *Reference Guide* included on the CD-ROM that came with your printer.

Printing

Printing method	On-demand ink jet
Nozzle configuration	Black: 180 nozzles × 3 (photo black, matte black, light black) Color: 180 nozzles × 5 (cyan, magenta, light cyan, light magenta, yellow)
Maximum resolution	2880 × 1440 dpi
Engine reliability	
Total print volume	20,000 A2 images (360 × 360 dpi)
Print head life	8.4 billion dots per nozzle
Periodic maintenance (pump unit, head cleaner, cap assembly)	Requires replacement approximately every 18,000 pages (A1-size plain paper)
Cutter blade life (user replaceable)	Approximately 2,000 B0+ sheets (EPSON media up to 4.33 mil thick); approximately 1,000 B0+ coated sheets
Print direction	Unidirectional/Bidirectional
Control code	EPSON ESC/P® Raster Photographic Driver
Paper feed speed	215 ± 10 milliseconds per 1/6-inch line
Line spacing	1/6 inch or programmable in 1/1440-inch increments
RAM	32MB

Environmental

	Operation	Storage	Transit (stored in shipping container)
Temperature	50 to 95 °F (10 to 35 °C) Print quality guarantee: 59 to 77°F (15 to 25 °C)	–4 to 104 °F (–20 to 40 °C) (1 month at 104 °F)	–4 to 140 °F (–20 to 60 °C) (120 hours at 140 °F)
Humidity (without condensation)	20 to 80% RH 40 to 60% RH for guaranteed print quality	20 to 85% RH	5 to 85% RH

Electrical

Specification	Description
Input voltage range	90 V to 264 V
Rated frequency range	50 to 60 Hz
Input frequency range	49 to 61 Hz
Rated current	1.0 A at 120 V 0.5 A at 220 V
Power consumption	Approx. 50 W or less (ISO 10561 letter pattern) 15 W or less in standby mode 0.7 W or less in power off mode

Check the label on the back of your printer for voltage information.

Dimensions

Specification	With tray and roll holder	Without tray and roll holder
Height	14 inches	13 inches
Width	33.9 inches	33.9 inches
Depth	29.5 inches	18.5 inches

Operating Depth

With paper tray, without roll holder	23 inches
With roll holder, without paper tray	24.75 inches
With tray fully extended and roll holder	39.5 inches
With tray fully extended, without roll holder	33.5 inches

Weight

Boxed, with pallet	130 lb
Printer with tray and roll holder	85 lb
Printer without tray and roll holder	74 lb
Roll paper holder only	6 lb
Paper tray only	5 lb

Packing Dimensions and Weight

Specification	Box and packing material	Pallet only
Weight	21 lb	22 lb
Height	22.75 inches	5 inches
Width	39.5 inches (box and pallet)	
Depth	32 inches (box and pallet)	

Printer Interfaces

- USB (1.1 and 2.0 compatible)
- IEEE-1394 FireWire

In addition, a Type-B expansion slot is available for installing an Ethernet network card (10/100 Base TX).

Safety Approvals

Safety standards	UL 60950, CSA 22.2 No. 60950
EMC	FCC part 15 subpart B, class B, CSA C108.8 class B

Media

Roll Paper

Maximum roll width	17 inches
Maximum roll length	Up to 147 feet for 2-inch cored media Up to 662 feet for 3-inch cored media
Weight range	64 to 90 g/sm
Roll paper compatibility	Handles both 2- and 3-inch cored media
Maximum roll paper diameter	4 inches (2-inch core) or 6 inches (3-inch core)

Cut Sheets

Sizes	8 × 10 inches A4 (8.3 × 11.7 inches) Letter (8.5 × 11 inches) B4 (10.1 × 14.2 inches) 11 × 14 inches 30 × 40 cm (11.8 × 15.7 inches) A3 (11.7 × 16.5 inches) US B (11 × 17 inches) Super A3/B (13 × 19 inches) B3 (14.2 × 20.3 inches) 16 × 20 inches 40 × 60 cm (15.7 × 23.6 inches) A2 (16.5 × 23.4 inches) US C (17 × 22 inches)
Weight range	17 lb bond up to 1.5 mm posterboard

Since the quality of any particular brand or type of paper may be changed by the manufacturer at any time, EPSON cannot attest to the quality of any non-EPSON brand or type of paper. Always test samples of paper stock before purchasing large quantities or printing large jobs.

Poor quality paper may reduce print quality and cause paper jams or other problems. If you encounter problems, switch to a higher grade of paper. Do not use curled, folded, or deckle-edge paper.

Printable Area

Default roll paper margins are 0.55 inches (15 mm) top and bottom, and 0.12 inches (3 mm) right and left. Using the Menu system, you can set all the margins to 15 mm or 3 mm.

Default cut sheet margins are 0.12 inch (3 mm) top, right, and left, and 0.55 inch (14 mm) bottom.

The borderless printing feature allows edge-to-edge printing on some media.

Ink Cartridges

Lightfastness*	Color: up to 100 years Black and white: over 100 years
Cartridge life	2 years from production date if unopened; within 6 months after opening package, at 77 °F (25 °C)
Temperature	
Storage (uninstalled)	–22 to 104 °F (–30 to 40 °C); 1 month at 104 °F
Storage (installed)	–4 to 104 °F (–20 to 40 °C); 1 month at 104 °F
Transit	–22 to 140 °F (–30 to 60 °C); 1 month at 104 °F, 120 hours at 140 °F
Freezing	5 °F (–15 °C); ink thaws and is usable after at least 3 hours at 77 °F (25 °C)
Capacity	110 or 220 ml

Weight

110 ml	Approximately 0.44 lb (200 g)
220 ml	Approximately 0.85 lb (385 g)

* Preliminary data from Wilhelm Imaging Research, Inc. indicate the lightfastness of color UltraChrome™ prints made by the EPSON Stylus Pro 4000 printer will be rated up to 100 years under glass on specific EPSON media. Data indicate the lightfastness of black and white UltraChrome images will be rated as greater than 100 years under glass on specific EPSON media.

Ink lightfastness ratings are based on accelerated testing of prints on specialty media, displayed indoors, under glass. Actual print stability will vary according to media, printed image, display conditions, light intensity, humidity, and atmospheric conditions. EPSON does not guarantee longevity of prints. For maximum print life, display all prints under glass or lamination or properly store them. Visit www.wilhelm-research.com for the latest information.

Index

A

Accessories, 10
Aligning print head, 99 to 100
Auto Cut setting
  Mac OS 9, 61
  Mac OS X, 53
  Windows, 81
Auto Rotate setting
  Mac OS 9, 61
  Windows, 82

B

Background printing, Mac OS 9, 69
Banding, 120
Blank pages, 125
Blurry prints, 122
Borderless printing
  Mac OS 9, 59 to 62
  Mac OS X, 45 to 47
  Windows, 79 to 83
Buttons, control panel, 116

C

Cable
  problems, 124, 125
  requirements, 12
Canceling print jobs
  Mac OS 9, 70
  Mac OS X, 55
  Windows, 87
Cartridges, *see* Ink cartridges
Cleaner (cleaning unit), checking
  status, 94 to 96
Cleaning
  print head, 96 to 98, 105
  printer, 111
Color management
  Mac OS 9, 66
  Mac OS X, 50 to 51
  Windows, 85
Color problems, 121, 125
ColorSync settings, 50, 66
Component life, checking, 94 to 96
Configuration options
  Mac OS 9, 71 to 72
  Windows, 88 to 90
Control panel
  aligning print head, 99 to 100
  buttons, 116
  changing language, 105
  changing measurement units, 105
  cleaning print head, 98
  component life, checking, 94 to 96
  illustration, 116
  ink levels, checking, 94 to 96, 101
  lights, 116 to 119
  messages, 116 to 119
  monitoring printer, 116 to 119
  restoring default settings, 105
  status check, printing, 94
CR (carriage) motor, checking status, 94 to 96
Custom paper size
  Mac OS 9, 60
  Mac OS X, 45 to 46
  Windows, 81
Custom Preset, 53 to 54
Cut sheet paper
  heavy stock, 27 to 40
  loading, 18 to 30
  paper paths, 20
  printable area, 139
  tray capacity, 21
Cutter
  cutting paper manually, 38 to 39
  ordering replacement blade, 10
  replacing blade, 107 to 109
  service life, 135

D

Date and time setting, 105
Deleting print jobs
  Mac OS 9, 70
  Mac OS X, 55
  Windows, 87

Depth of printer, 136 to 137
Diagnosing problems, 115
Dimensions of printer, 136 to 137
Documentation, how to use, 9

E

Electrical specifications, 136
Energy consumption, 136
ENERGY STAR, 13
Engine reliability, 135
Environmental specifications, 136
EPSON
  accessories, 10
  help, 11
  media, 19, 31
  Preferred Protection Plan, 11
  Store, 10
EpsonNet print server card, installing, 133 to 134
Error messages, 116 to 119
Error notification
  Mac OS 9, 71 to 72
  Windows, 88 to 89
Ethernet interface
  card, installing, 133 to 134
  card, ordering, 10
  system requirements, 12

F

Faint prints, 122
FireWire requirements, 12
Flip Horizontal setting
  Mac OS 9, 66
  Mac OS X, 49
  problems, 125
  Windows, 84

H

Head Alignment menu, 99
Head unit (print head), checking status, 94 to 96
Heavy media, cutting, 38 to 39
Height of printer, 136 to 137
Help, EPSON, 11
Hex dump, 105 to 106
High Speed Copies setting
  Mac OS 9, 72
  Windows, 89
High Speed setting
  Mac OS 9, 66
  Mac OS X, 49
  Windows, 84
Humidity requirements, 136

I

ICM setting, 85
Ink
  lightfastness, 139
  maintenance tank, 94 to 96
  monitoring level, 55 to 57, 70 to 71, 87 to 88, 94 to 96
  waste ink system, 135
Ink cartridges
  checking status, 94 to 96, 101
  ordering, 102
  replacing, 100 to 104
  safety instructions, 15
  specifications, 139 to 140
Ink light, 116 to 119

J

Jams, paper, 127 to 132
Job history, 95

L

Layout
  Mac OS 9 options, 58 to 61
  Mac OS X options, 44 to 46
  Windows options, 78 to 82
Lightfastness, 139
Lights, control panel, 116 to 119

M

Macintosh OS 9
  advanced print options, 65 to 68
  background printing, 69
  basic print options, 63 to 64
  borderless printing, 59 to 62
  color management, 66
  configuration options, 71 to 72
  layout options, 58 to 61
  managing print jobs, 68 to 72
  Monitor IV, 69 to 70
  monitoring printer, 68 to 72
  network printing, 73
  page setup options, 58 to 61
  paper configuration options, 67 to 68
  roll paper options, 59 to 61
  sharing printer, 73
  software, uninstalling, 113 to 114
  Status Monitor, 70 to 71
  system requirements, 11 to 12
  Utility menu, 70 to 71
Macintosh OS X
  basic print options, 47 to 50
  borderless printing, 45 to 47
  canceling print jobs, 55
  checking ink levels, 55 to 57
  color management, 50 to 51
  custom preset, 53
  monitoring print jobs, 54
  network printing, 57
  page setup options, 44 to 46
  paper configuration settings, 51 to 52
  Printer Utility, 56
  roll paper options, 52 to 53
  Sharing printer, 57
  Status Monitor, 55 to 57
  system requirements, 11 to 12
Maintenance, 93 to 111
Maintenance menu, 98, 107
Maintenance mode, 105
Maintenance tank
  ordering, 10
  replacing, 109 to 110
Manuals, how to use, 9
Margins
  incorrect, 125
  minimum, 139
  printing without, 45 to 47, 59 to 62, 79 to 83
Mechanical specifications, 136 to 137
Media Type
  Mac OS 9, 63
  Mac OS X, 48
  Windows, 76 to 77
Memory
  problems, 124
  requirements, 11 to 12
  specifications, 135
MicroWeave setting, 66
Monitor IV, 69 to 70
Monitoring printer
  control panel, 116 to 119
  Mac OS 9, 68 to 72
  Mac OS X, 54 to 57
  Windows, 87 to 90
Motors, checking status, 94 to 96
Moving printer, 111 to 113

N

Network card, installing, 133 to 134
Network printing
  Mac OS 9, 73
  Mac OS X, 57
  Windows, 90 to 92

O

Optional equipment, 10

P

Page Line setting
  control panel, 39
  Mac OS 9, 61
  Mac OS X, 53
  Windows, 82
Page setup options
  Mac OS 9, 58 to 61
  Mac OS X, 44 to 46
Paper
  attaching to spindle, 33
  configuration settings, 67 to 68, 85 to 87, 122
  custom settings, 40 to 42
  custom size, 45 to 46, 60
  custom size, creating, 81
  cut sheet, 18 to 30
  EPSON, 19, 31
  handling, 17 to 42
  heavy stock, 27 to 40
  jams, 127 to 132
  loading in tray, 18 to 26
  loading manually, 27 to 30
  Mac OS 9 options, 58 to 61
  Mac OS X options, 44 to 46
  non-EPSON, 40 to 42
  ordering, 19, 31
  printable area, 139
  problems, 126 to 132
  removing from spindle, 37
  roll, 31 to 39
  specifications, 138 to 139
  suction, 42, 52, 67, 86
  trim lines, 39, 53, 61, 82
  Windows options, 78 to 82
Paper cutter
  replacing blade, 107 to 109
  service life, 135
Paper feed speed, 135
Paper light, 116 to 119
Paper paths, 20
Paper Size setting
  Mac OS 9, 60
  Mac OS X, 45 to 46
  problems, 125
  Windows, 81
Paper Source setting
  Mac OS 9, 58, 60
  problems, 125
  Windows, 78, 80
Paper tray
  capacity, 21
  loading, 18 to 26
Pause light, 116 to 119
Pausing print jobs
  Mac OS 9, 70
  Mac OS X, 55
  Windows, 87
PF (paper feed) motor, checking status, 94 to 96
PhotoEnhance, 66, 77, 85
Platen gap setting, 122
Posterboard, 27 to 40
Power cleaning cycle, 98
Power consumption, 136
Print head
  aligning, 99 to 100
  checking status, 94 to 96
  cleaning, 96 to 98, 105
  locking, 112
  service life, 135
Print jobs
  canceling, 55, 70, 87
  managing, 68 to 72, 87 to 90
  pausing, 55, 70, 87
Print quality
  Mac OS 9, 65
  Mac OS X, 49
  problems, 120 to 122
  Windows, 84
Print server, installing, 133 to 134

Printer
box, 137
checking status, 55 to 57, 70 to 72, 94 to 96
cleaning, 111
dimensions, 136 to 137
maintaining, 93 to 111
monitoring, 55 to 57, 68 to 72, 87 to 89, 119
motors, checking status, 94 to 96
moving, 111 to 113
packaging, 137
port, 124
software, uninstalling, 113 to 114
specifications, 135 to 137
stand, optional, 10
status check, 94 to 96
storing, 111 to 113
total print volume, 95, 135
transporting, 111 to 113
turning off, 14
weight, 137
Problems
banding, 120
blank paper, 125
blurry prints, 122
cable, 124, 125
color, 121, 125
diagnosing, 115
faint prints, 122
garbled characters, 125
inverted image, 125
margin, 125
memory, 124
misalignment, 120, 121
nothing prints, 124
operational, 123 to 124
paper, 126 to 132
paper feeding, 125
paper jams, 127 to 132
print quality, 120 to 123
printer driver, 124 to 125
printing stops, 124
roll paper cannot be cut, 125
Problems (continued)
slow printing, 126
smeared prints, 122 to 123
Progress Meter, 87, 89

R

RAM, *see* Memory
Registering non-EPSON media, 40 to 42
Requirements, system, 11 to 12
Resolution
Mac OS 9, 65
Mac OS X, 49
maximum, 135
Windows, 84
Roll paper
attaching to spindle, 33
cannot be cut, 125
cutting manually, 38 to 39
EPSON, 31
loading, 31 to 36
Mac OS 9 settings, 59 to 61
Mac OS X settings, 52 to 53
Page Line setting, 53
printable area, 139
removing from spindle, 37
Save Roll Paper setting, 53, 82
trim lines, 39, 53, 82
Windows settings, 80 to 82

S

Safety
approvals, 138
instructions, 13 to 15
Save Roll Paper setting, 53, 82
SelecType menus
Custom Paper, 40 to 42
Cutter Replace, 107
Head Alignment, 99
Maintenance, 98, 107
Printer Status, 95
Test Print, 94

Software, uninstalling, 113 to 114
Specifications
  electrical, 136
  environmental, 136
  ink cartridges, 139
  mechanical, 136 to 137
  paper, 138
  printable area, 139
  printer, 135 to 137
Speed and Progress utility, 88 to 90
Spindle
  adapter, 37
  loading roll paper, 33
  purchasing additional, 10
  removing roll paper, 37
Spool folders, Mac OS 9, 71 to 72
sRGB setting, 85
Stand, optional printer, 10
Status Monitor
  Mac OS 9, 70 to 71
  Mac OS X, 55 to 57
  Windows, 87 to 90
Storing printer, 111 to 113
Suction, 42, 52, 67, 86
Support, EPSON, 11
System requirements, 11 to 12

T

Technical support, 11
Temperature requirements, 136
Test Print menu, 94
Time and date setting, 105
Total prints, checking, 95
Transporting printer, 111 to 113
Trim lines, printing
  control panel, 39
  Mac OS 9, 61
  Mac OS X, 53
  Windows, 82
Troubleshooting, 115 to 132

U

UltraChrome ink cartridges, 102
Ultrasonic cleaning cycle, 105
Uninstalling software, 113 to 114
Unit ID number, 11
Usage count, 95
USB
  cable requirements, 12
  driver, uninstalling, 114
User-defined paper size, 81
Utility menu
  Mac OS 9, 70 to 71
  Mac OS X, 56

W

Waste ink system, 94 to 96, 109 to 110, 135
Weight of printer, 137
Width of printer, 136 to 137
Windows
  advanced print options, 83 to 87
  basic print options, 76 to 78
  borderless printing, 79 to 83
  canceling print jobs, 87
  color management, 85
  driver, 75 to 87
  layout options, 78 to 82
  managing print jobs, 87 to 90
  monitoring preferences, setting, 88 to 90
  network printing, 90 to 92
  optimizing print speed, 88 to 90
  paper configuration options, 85 to 87
  roll paper options, 80 to 82
  sharing printer, 90 to 92
  software, uninstalling, 114
  Speed and Progress utility, 88 to 90
  status alerts, 89
  Status Monitor, 87 to 90
  system requirements, 12
  user-defined paper size, 81
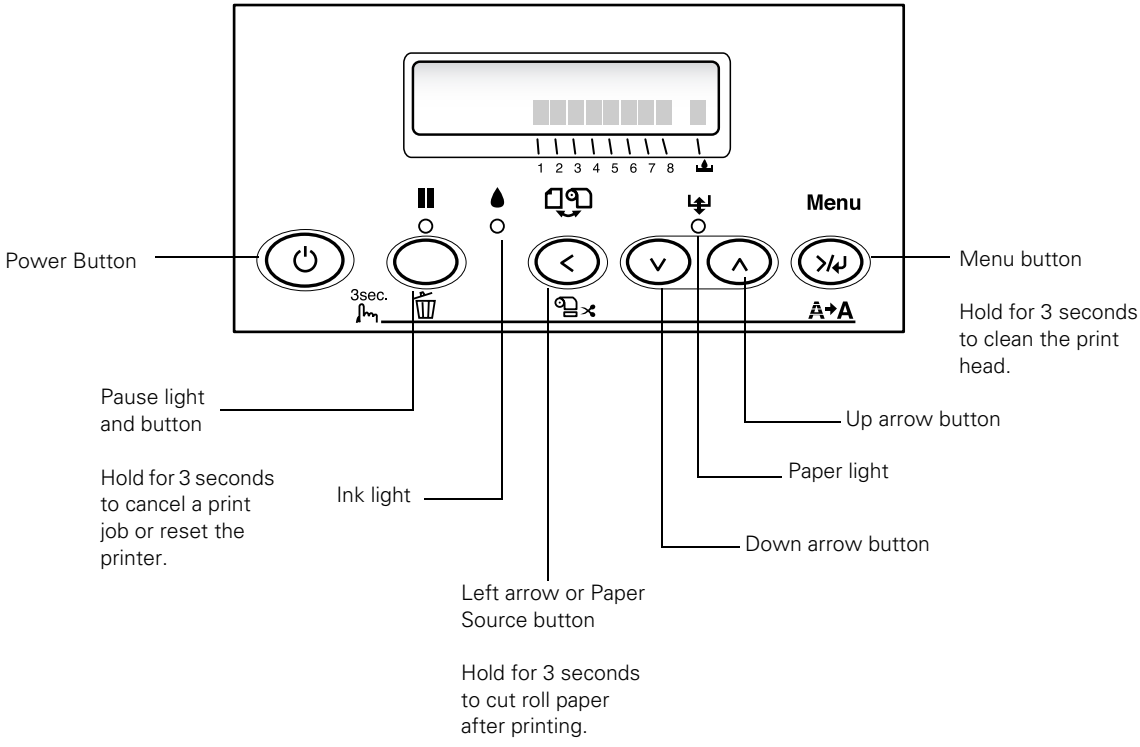
Control Panel Lights and Buttons