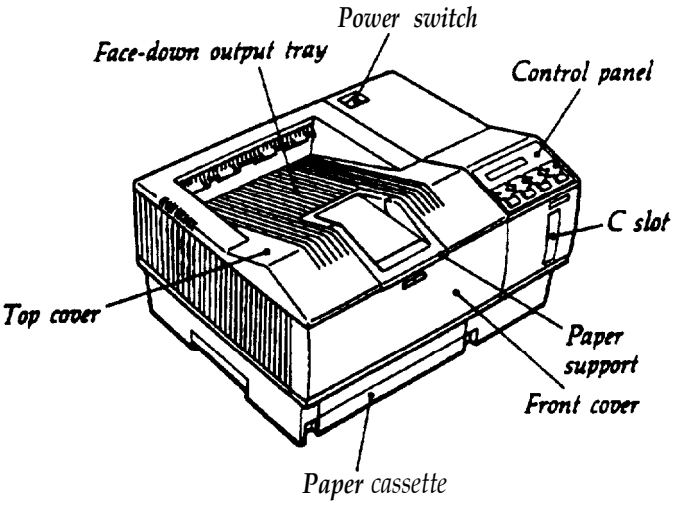

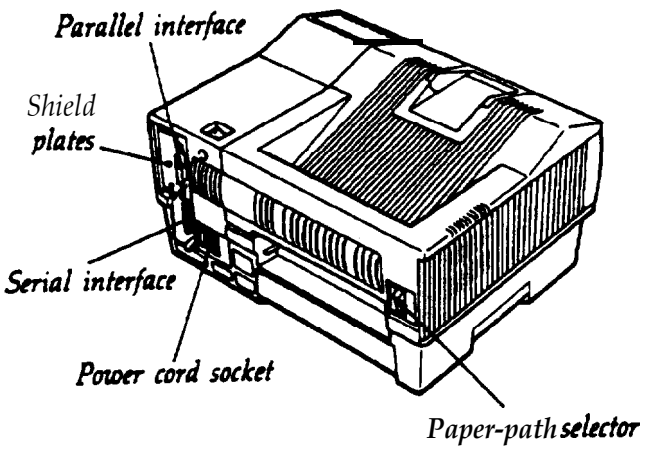

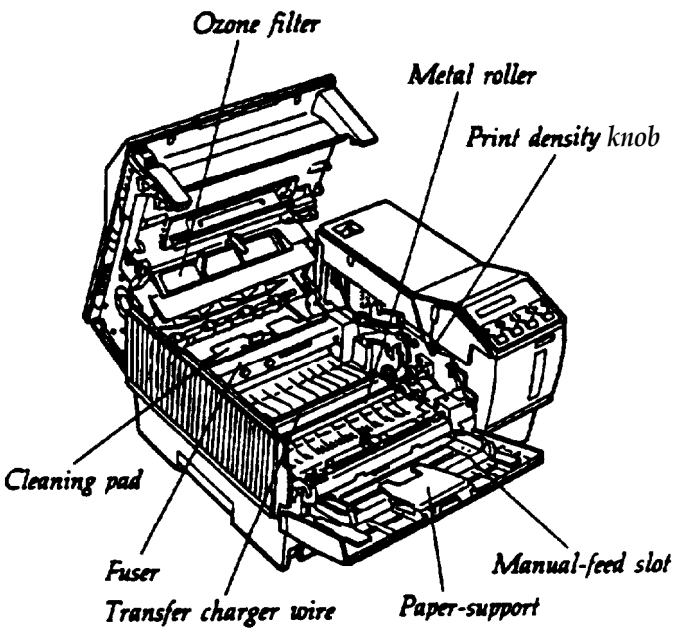

Printer Specifications

Printing

Printing method	Laser beam scanning and dry electrophotographic process
Resolution:	300 X 300 dpi
Printing speed:	Up to 10 pages per minute (letter or A4) (depending on the font and quantity of data)
First print:	Less than 18 seconds with A4 or letter
Warm-up time:	70 seconds or less at normal temperature

Printer modes..

- HP LaserJet series III emulation
- ESC/P 24-pin printer emulation (LQ-2500)
- ESC/P 9-pin printer emulation (FX-800/1000, FX-86e/286e)

IC card slots:	2 slots for identity or font cards • Slot A holds identity or font cards • Slot B holds font cards only
Cartridge slot:	1 slot for font cartridges
Resident fonts:	Depends on the printer mode
External fonts:	Optional fonts provided with font cards or cartridges Download fonts

Paper and paper delivery

Paper Specifications

Types:

- Plain paper
- Special papers:
- Libels
- Envelopes
- Transparencies
- Colored paper
- Cardstock

Epson does not recommend or guarantee any particular brand of paper. Because paper characteristics are subject to change by individual manufacturers, it is your responsibility to ensure the quality of paper used with the printer.

Paper weight:	Plain paper: 60 to 90 g/m², 16 to 24 lb Card stock: 90 to 157 g/m², 24 to 42 lb

Paper sizes:

	Type	Size
Paper:	A4	210 X 297 mm
	AS	148 X 210 mm
	B5	182 × 257 mm
	Letter	8.5 X 11 inches
	Half-Letter	5.5 X 8.5 inches
	Legal	8.5 X 14 inches
	Government Letter	8.0 X 10.5 inches
	Government Legal	8.5 X 13 inches
	Executive	7.25 X 10.5 inches
	F4	210 X 330 mm
Envelope:	Monarch	7/8 × 7 1/2 inches
	Commercial 10	4 1/8 X 9 1/2 inches
	DL	110 × 220 mm
	C5	162 × 229 mm

Printable area:

Depends on the printer mode.

Range of paper width and length:

	Width	Length
Paper cassette	Size of your standard cassette	Size of your standard cassette
Manual feed	86 to 216 mm (3.4 to 8.5 inches)	140 to 356 mm (5.5 to 14 inches)

Paper feed alignment and direction:

Center alignment for all sizes

Paper feed: Automatic or manual feed

Input paper supply (75 g/m² or 20 lb paper):

250 sheets
250 additional sheets with optional lower paper cassette unit installed
several envelopes

Paper eject: Face-up or face-down

Paper eject capacity (75 g/m² or 20 lb. paper):

Face-down 150 sheets
Face-up 50 sheets with optional face-up output tray

Consumable products

Long life imaging cartridge (S051009):

Storage temperature:
0 to 30 C (32 to 86 F)

Storage humidity:
30 to a5 % RH

Shelf life: 18 months after production

Life: Up to 8000 pages under the following conditions: Letter- or A4-size paper, continuous printing, and 5% print ratio.

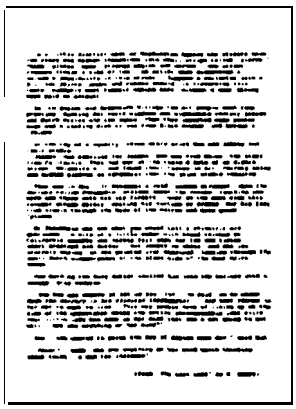

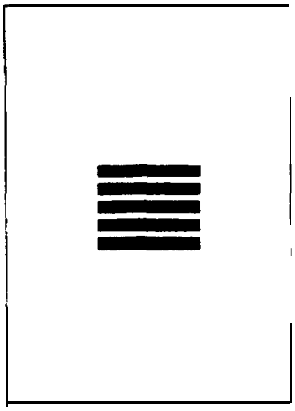

The number of pages you can print with an imaging cartridge varies depending on the type of printing. If you print a few page at a time or print dense text exceeding the 5% print ratio, your cartridge may print fewer pages.

Ozone filter H9laa7):
Needs to be replaced every six months.

Mechanical

Dimensions and weight:

Height:	266 mm (10.5 inches)
Width:	477 mm (18.8 inches)
Depth:	383 mm (15.1 inches)
Weight:	18 kg

Durability: 5 years or 300,000 sheets, whichever comes first

Electrical

	120 V model	220/240 V model
Voltage	90 V to 132 V	198 V to 264 V
Rated frequency	50 Hz to 60 Hz ± 3 Hz	50 Hz to 60 Hz ± 3 Hz
Power comsumption	Less than 850 W	Less than 850 W
Insulation resistance	2 MΩ minimum	2 MΩ minimum
Dielectric strength (between AC line and chassis)	1000 VAC rms for one minute or 1200 VAC rms for one second	1500 VAC rms for one minute or 1650 VAC rms for one second

Note: Check the label on the back of the printer for the voltage of your printer.

controller hardware

CPU: 68000, 16.67 MHz

RAM: 1.0 MB (expandable up to 7.5 MB)

Environmental

Temperature: Operation: 10 to 35 °C (50 to 95 °F)
Storage: 0 to 35 ● C (32 to 95 °F)

Humidity: Operation: 15 to 85 % RH
Storage: 30 to 85 % RH

Altitude: 2500 meters (8200 feet) maximum

Options

The Lower Paper Cassette Unit

The optional lower paper cassette unit is an automatic sheet feeder that fits directly beneath the printer. It houses the adjustable paper cassette, which holds up to 250 sheets of paper to supplement the standard paper cassette's 250-sheet capacity.

With the optional cassette installed, you can load two different sizes of paper in your printer at once: one in the lower cassette and the other in the standard cassette. You can also use the SelecType INPUT AUTO setting to use both cassettes and print up to 500 sheets of the same size paper.

Installing the lower paper cassette unit

If you purchased your printer and lower paper cassette unit at the same time, first set up your printer and then run a print test. Then, when you are sure the printer is working properly, install the optional cassette unit.

1. Turn off the printer.
2. Unplug the printer's power cord from the electrical outlet and from the printer. Also unplug the interface cable.
3. Remove the face-up tray, if it is installed, by lifting it up slightly and pulling it out.
4. Move the printer and place the lower paper cassette in the location where you will operate your printer.
5. Lift the printer using the recessed handles on each side and hold it over the lower paper cassette. The printer is heavy, so you may need to have someone help you lift it.

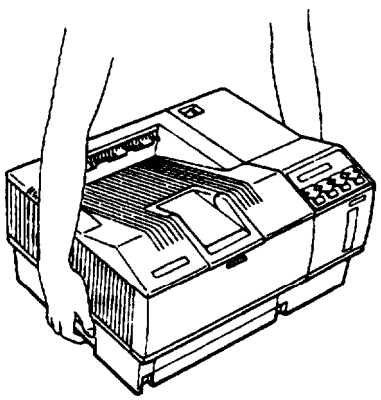

Also, you may need to have someone help you align the holes on the printer with the pins on the cassette unit.

6. Make sure the front of the printer faces the same way as the front of the cassette. Then align the printer with the cassette using the two alignment pins, shown below. These pins fit into the two holes on the bottom of the printer. Lower the printer until it rests on the cassette unit.

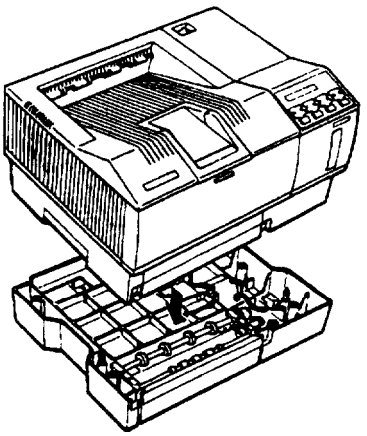

7. Plug the power cord back into the printer and into an electrical outlet. Also re-attach the interface cable.
8. Turn the printer on. On the right of the display, you see both the size of paper in the standard cassette and the size of paper in the lower paper cassette unit.

```
READY:P LJ-3   LT A4
```

If you use letter size in the standard cassette and A4 size in the lower paper cassette, you see the display above. Two hyphens (--) in the display indicate that are tray is empty.

The Face-up Output Tray

The printer normally delivers paper face down on top of the printer. If you want face-up delivery, you can install the optional face-up output tray. This tray gives you immediate viewing of your printed output and is recommended for printing on media such as labels and overhead transparencies that require a straight-through paper path.

Installing the face-up output tray

1. Unpack both the tray and the static brush from the carton.
2. Turn off the printer.

WARNING: If you have used the printer recently, let it cool before you proceed.

3. Snap the static brush onto the upper edge of the face-up output slot shown below.

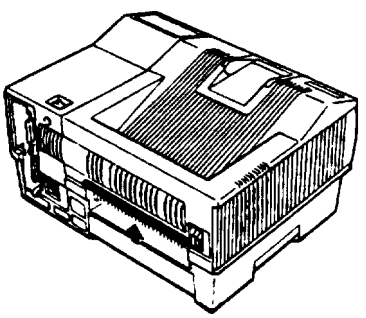

4. Slide the tray into the bottom of the face-up output slot so the notches on each side fit under the tabs on the side of the slot

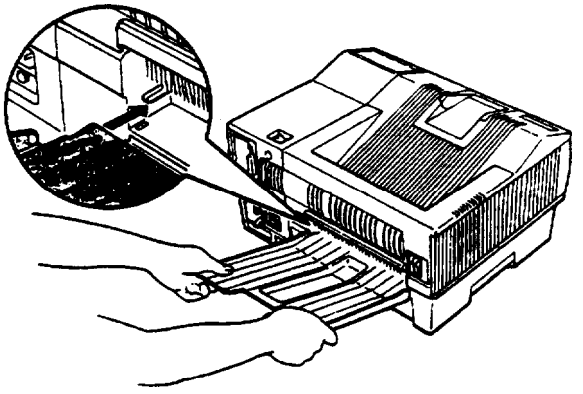

The printer is factory set for facedown output. To select face-up delivery, set the paper path selector to the FACE UP position, as shown below.

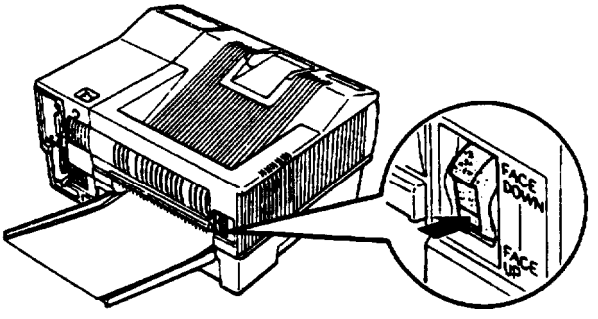

Memory Options

The printer comes with 1MB of Random Access Memory (RAM). If you regularly print complex pages using graphics or downloaded fonts, you may need to increase your printer s memory. You can increase it up to 7.5MB.

You have two options for adding memory to your printer:

- Increase the memory on the main controller board with .5MB memory chip sets. You can install up to two chip sets for a total of 1MB of additional RAM (2MB RAM total).
- Add a OK memory expansion board and install up to four 2MB chip sets and/or .5MB chip sets for a total of up to 6.5MB of additional RAM (7.5 MB RAM total).

You can install memory on either the controller board or the OK expansion board or both.

There are two types of chip sets you can buy:

- .5MB chip sets each containing four 256Kbit X 4 80ns DRAM 20-pin DIP chips
- 2MB chip sets each containing four 1Mbit X 4 80ns DRAM 20-pin DIP chips

You can install .5MB chip sets on the controller board or the OK expansion board; you can install 2MB chip sets only on the OK expansion board.

Note: You can use the 0.5MB or 2.0MB expansion board (C82201* or C82203*) in your printer with the following conditions:

- You must first increase the controller board's memory to its full 2.0MB capacity.
- You can use only 0.5MB chip sets to fill the expansion board.
- You do not need to change any DIP switches.

When to increase the printer memory

The printer displays one of these status messages when you have insufficient memory.

- INSUFF MEMORY
- PAGE BUFFER FULL
- ADD MEMORY FOR CH X

These messages are described in more detail in Chapter 6. If one of these messages appears, you can try to reclaim any unused RAM by changing the settings for the SelecType FULL PRINT and RX-BUFFER SIZE options. See Chapter 3 for information on changing these options. If insufficient memory is still a problem, you can install additional memory, as described in this section.

Using an optional identity card requires at least 1.5MByte of RAM. Therefore, you must add at least 0.5MB of additional RAM to your printer to use an identity card.

If you use the INDIVIDUAL setting in SelecType. each channel requires at least 0.5MB of RAM. Therefore, if you plan to use more than two interface chanels, you must add RAM to your printer.

Selecting a memory option

Before adding memory, you should determine the combination of components you need to use to obtain the total amount of memory you want. Keep in mind that your printer comes with 1MB of internal memory.

If you need more than 2MB of RAM, you can install the OKB expansion board and use either 0.5MB or 2MB chip sets.

The table below describes the chip sets you can install on the controller board and/or the 0KB expansion board.

0KB expansion board RAM configurations			Total RAM (internal, controller board, and expansion board)		
1	2	3	4	5	6
Install n 2MB chip sets	Install n .5MB chip sets	Total RAM on the expansion board	Controller board with no chip sets (1MB RAM)	Controller board with 1 chip set (1.5MB RAM)	Controller board with 2 chip sets (2MB RAM)
--	1	.5MB	1.5MB	2MB	2.5MB
--	2	1MB	2MB	2.5MB	3.0MB
--	3	1.5MB	2.5MB	3MB	3.5MB
--	4	2MB	3MB	3.5MB	4MB
1	--	2MB	3MB	3.5MB	4MB
1	1	2.5MB	3.5MB	4MB	4.5MB
1	2	3MB	4MB	4.5MB	5MB
1	3	3.5MB	4.5MB	5MB	5.5MB
2	--	4MB	5MB	5.5MB	6MB
2	1	4.5MB	5.5MB	6MB	6.5MB
2	2	5MB	6MB	6.5MB	7MB
3	--	6MB	7MB	7.5MB	*
3	1	6.5MB	7.5MB	*	*

* If you mall 6.5MB of memory on the 0KB expansion board. you do not need to install any additional chip sets on the controller board: your printer can access a maximum of 7.5MB.

Installing additional memory

To install a memory chip set or a memory expansion board you need a cross-head **screwdriver** and a chip puller or a flat-head screwdriver. If you have questions about installing the chip set or the board, contact your dealer for assistance.

WARNING: High voltages are present inside the printer when the power is on. Do not attempt to remove the controller board **unless** the printer is turned off and the **power cord is unplugged. Also, try not to touch the** contacts on the printer's circuit board because many **of** the components can be destroyed by the static electricity **in your body**.

The rest of this chapter describes the procedures for installing **a** memory chip set and/or the OK expansion board.

Removing the controller board

1. Unplug the power cable from the electrical outlet and from the back of the printer.
2. Disconnect all interface cables from the back **of** the printer.
3. Remove the four screws that secure the metal bracket on the back of the printer. Keep the screws so you can use them to reinstall the controller board.

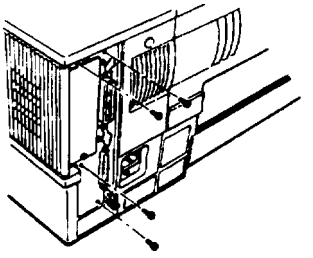

4. Press down on the lever at the bottom of the bracket to release the controller board, as shown below. **Press firmly** until the board pops out slightly.

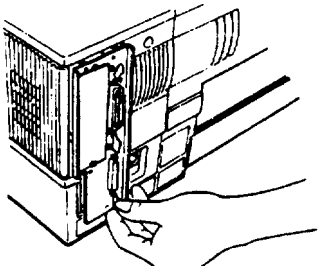

5. Grasp the board with both hands and pull it straight out of its slot.

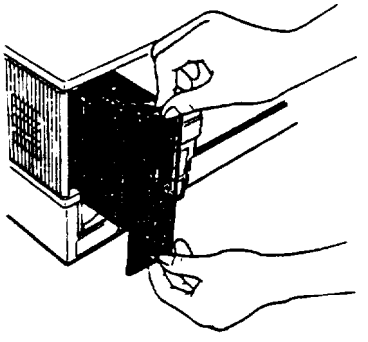

6. Set the controller board on a clean, stable surface with the bracket (connector) facing to your right and the components **facing up.**
7. If you have installed an optional interface card, you must remove it before you can **install a memory** chip set on the **controller** board. Grasp the interface card and pull it straight out of the interface slot.

Note: If you are installing chip sets on **the** controller board, you may want to remove the plastic guide rail above the **RAM chip** sockets. To do so, release the two tabs that secure the guide rail and lift it off the board. **Replace** the rail after you **install** the chips

Installing chip sets on the controller board

The RAM chip sockets are located on the upper right side of the controller board.

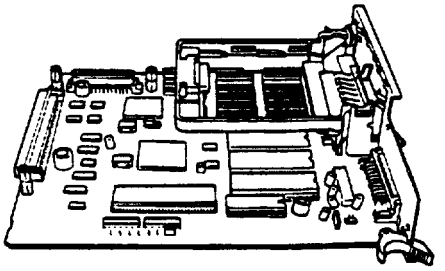

There are two sectors on the board, each containing four chip sockets (identified by their IC numbers), as shown below.

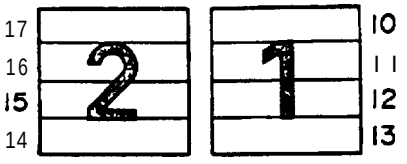

If both two sectors are empty, **install** the **first** chip **set** in sector 1. If sector 1 is already filled, install the second chip set in sector 2.

sector	IC number	Total RAM when filled
1	10, 11, 12, 13	1.5MB
2	14, 15, 16, 17	2MB

CAUTION: You cannot install a **2MB** chip set on the controller board: you can only use the **.5MB chip** sets.

Follow these steps to install a memory chip set:

1. Make sure all the pins on the chip are aligned. They should point inward at slightly **less** than a **90°** angle, as shown below.

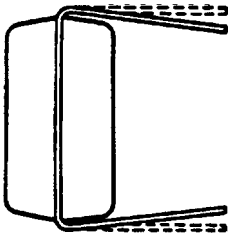

If any of the **pins** are bent incorrectly, **gently** push them back into alignment.

2. Line up the pins on the RAM chip with the holes in the socket. Be sure that the small notch on the end of **the** chip is toward your right.

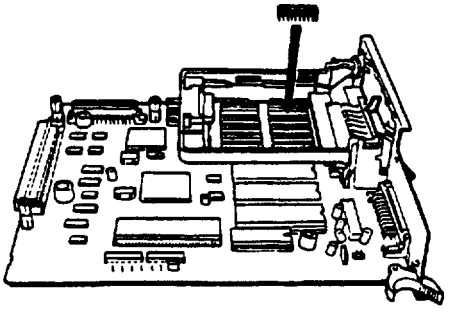

3. Gently press the chip halfway into the socket. If it goes in at an angle, remove it with a chip puller or a small flat-head screwdriver; then reinsert the chip.

CAUTION: Be careful not to scratch the chip or the board when removing the chip.

4. Once the chip is properly inserted, push down firmly on both ends to make sure it is fully seated.

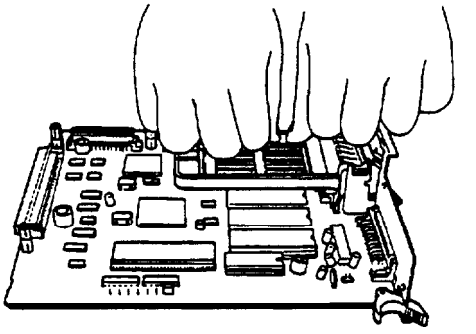

5. Repeat steps **1** through **4** for each of the remaining chips.

6. Reinstall the interface card, if necessary.

Installing chip sets on the memory expansion board

There are four sectors on the memory **expansion** board, each containing four chip sockets (identified by their IC numbers).

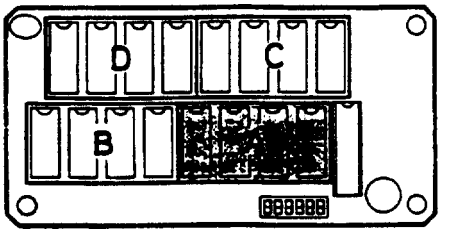

The four sectors must be filled in alphabetical order. For example, if you are installing your first chip set, install it in sector A. Then install your next chip set in sector B and so on. See the table under **"Selecting** a memory option," earlier in this section. for **a** list of the RAM configurations possible the memory expansion board.

Before you install the chips, check their pin alignment as described in step 1 of the previous **section.** Then follow these steps:

1. Place the expansion board on your work surface with the components facing up.
2. Align the chip's pins with the holes in the socket. Be sure the **small** notch on the end of the chip is facing in the direction shown below.

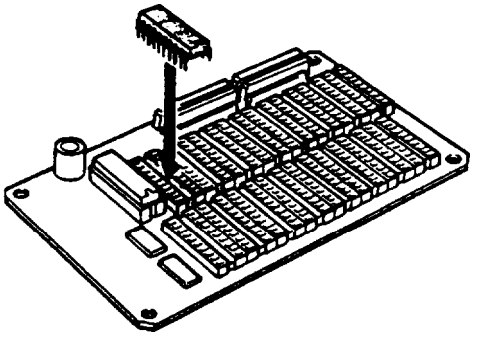

3. Press the chip into the socket as described in steps 3 and 4 of the previous section.
4. Set the board's DIP switches to indicate the amount of memory you have installed. Use a pointed object, such as a ball-point pen, to set the DIP switches as shown below.

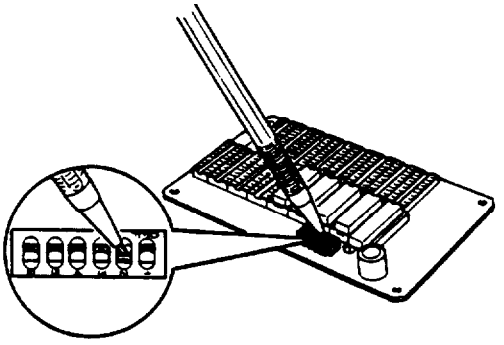

Set the switches according to the tables below.

DIP Switch	RAM (internal and amount added to controller board)		
	1MB	1.5MB	2MB
1	OFF	ON	ON
2	ON	OFF	ON

DIP Switch	Sector	ON	OFF
3	A	2MB	.5MB
4	B	2MB	.5MB
5	C	2MB	.5MB
6	D	2MB	.5MB

Installing the expansion board on the controller board

1. Locate connector CN3 on the controller board. position the memory expansion board as shown below, and carefully insert its connector into connector CN3.

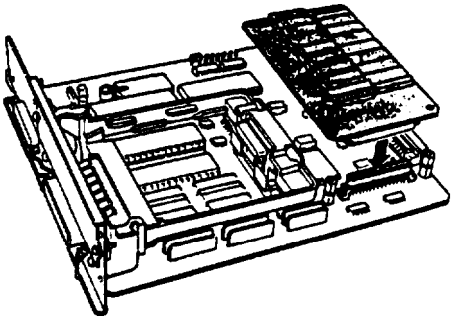

2. Secure the expansion board with the three screws that came with it.

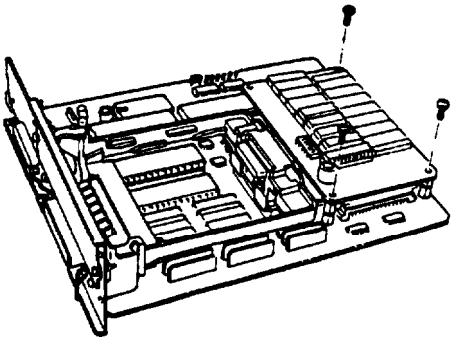

Reinstalling the controller board

1. Hold the controller board so the component side faces your left, and fit its top and bottom edges into the grooves inside the slot. Gently slide the board about halfway into the printer.

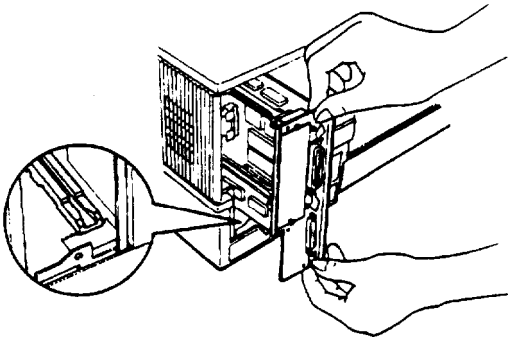

2. Make sure the lever on the bottom of the controller board is all the way down. As you slide the board further into the printer, make sure the lever's tab is positioned inside the opening in the bracket. as shown below.

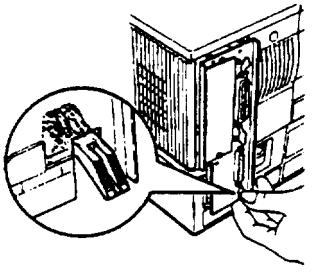

3. Now slide the controller board into the printer. The lever pivots outward. Firmly press up on the lever to lock the board into place.

   If the controller board does not fit smoothly into the printer, do not force it. Remove it and make sure the edges fit properly into the grooves in the slot.

4. Gently press in on the board to make sure it is fully seated. Then secure the board with the four screws you removed previously.

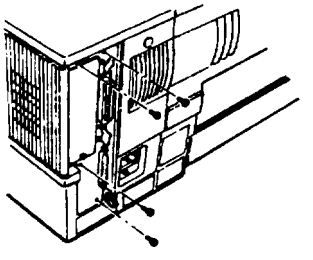

5. Replace the optional interface card, if you removed one
6. Connect any interface cables you removed.
7. Be sure the power is turned off and then plug the power cord into the printer and into an electrical outlet.

Option Specifications

Lower paper cassette unit

Electrical

AC power supply: DC 24 V supplied by the printer

Insulation resistance:
10 M ohm minimum

Dielectric strength (between AC line and chassis):
Can withstand 1000 VAC rms (120V model) or 1500 VAC rms (220/240V model) for one minute

Power consumption:
12 W or less

Paper and paper delivery

Weight: 60 to 90 g/m² (16 to 24 lb)

Paper feed: Automatic feed delivery system; tray capacity up to 250 sheets (75 g/m² or 20 lb paper)

Feeding speed: For first sheet, 18 seconds or less (A4 or letter-size paper)
For subsequent sheets, up to 10 pages per minute (M-sire paper)

Types: Plain paper, such as copier paper, memo sheets, and letterheads

Mechanical

Dimensions and weight (without the printer)

Height: 70 mm (2.8 inches)
Width: 480 mm (lg.9 inches)
Depth: 370 mm (15 inches) including the standard cassette
Weight: 3.8 kg (8.4lb) including the standard cassette

Face-up output tray

Dimensions and wright (without the printer):

Height: 40 mm (1.6 inches)
Width: 255 mm (9.2 inches)
Depth: 255 mm (11.2 inches)
Weight: 0.3 kg (0.7lb)

Paper eject capacity:
50 sheets (80g/m²)

Application Software

HP LaserJet III emulation mode

When your printer is in HP LaserJet III (LJ-3) mode, the factory setting, select one of the following drivers from your program's printer selection menu:

HP LaserJet IIISi™
HP LaserJet IIIP™
HP LaserJet series III™
HP LaserJet IIP™
HP LaserJet series II™
HP LaserJet Plus™
HP LaserJet 500™
HP LaserJet™

If none of the above printers is listed among your program s options, select any printer model that uses the HP Printer Command Language (PCL).

Epson LQ and FX emulation modes

When your printer is in the Epson LQ or FX printer mode, select one of the following drivers from your program s printer selection menu:

LQ-2500
LQ-1050/850
LQ-1000/800 (expanded ESC/P)
LQ-500
LQ-1500 (with version 2 ROM)
LQ printer
FX-1000/800 (286e/86e)
FX-85
FX-80

If none of the printers listed are available from your program, choose the first available of the following: RX, Epson printer, Standard printer, or Draft printer.

Sharing the Printer

You can connect your printer to as many as three different computers at the same time using any combination of the parallel, serial, and optional interfaces. Simply connect interface cables from the computers to the interfaces.

If you use the default printer mode LJ-3 for all the interfaces, that's all you need to do unless you need to change serial interface settings. If you wish, however, you can choose different printer modes for each interface, and you can allocate a separate pdrt of the printer s memory for each interface.

Your printer receives data from the computers through the following channels:

Channel P is the parallel interface.
Channel S is the serial interface.
Channel 0 is the optional interface.

Status and Error Messages

This section contains an alphabetical list of status and error messages that you may encounter and includes likely solutions to problems.

If an error occurs, the control panel displays an error messages that tells you what is wrong and, in some cases, offers a solution. Status messages also appear on the display during normal operation; they indicate the printer's current status.

> **Note:** In some cases, the red CONTINUE light flashes when an error is detected. This requires you to correct the problem and then press the CONTINUE button to clear the error. However. if the AUTO CONT option in SelecType is set to ON, some errors may clear automatically even though the problem remains.

In this section, status messages are preceded by [S], warning messages are preceded by [W], and error messages are preceded by [E]. In some cases the message you see on your display also shows the printer mode.

[E] ADD MEMORY FOR CH.1
The printer has insufficient memory available in the channel displayed. You may have changed the printer mode, increased the RX-BUFFER SIZE setting, or changed the CH INDIVIDUAL setting. To correct the error, decrease the RX-BUFFER SIZE setting or change the CH INDIVIDUAL setting in SelecType. Changing the CH setting from INDIVIDUAL to AUTOSENSE may solve this problem. If necessary, add memory to your printer.

[W] CANCELMANUAL FEED
There is no paper in the manual-feed tray when you have selected manual feed. To cancel manual feed, press the MANUAL button to feed paper from the cassette. This message alternates with the SET MANUAL message.

[E] CARD MEMORY OVERFLOW
This message indicates that the combined memory of the cards in slots A or B exceeds 4MB. Remove one or both of the cards and press the CONTINUE button.

[S] CHARCREATING
The printer is creating characters.

[S] COPY END X/X
Multiple-copy printing is canceled (you pressed the COPY END button with the printer off line).

[E] COVER OPEN
The printer's cover is open. Close the printer cover to continue printing

[S] DATA
The printer has received data but is not yet printing, or is off line. To resume printing, press ON LINE if the printer is off line, or press FEED.

[E] FEED JAM
Paper is not feeding into the printer from the specified cassette or has jammed on its way into the printer. If the paper is jammed at the paper cassette, open the printer case, remove the jammed paper from the standard paper cassette or optional paper cassette and then close the printer's covers.

[S] FONTCREATING
The printer is creating a font.

[S] GRAPHICDRAWING
The printer is composing a graphic.

[E] ILLEGAL CARD
The printer cannot read the card inserted in the slot indicated on the display. To correct the error, press CONTINUE. If the error message remains, make sure the printer is off line and remove the card. If the red CONTINUE light still flashes, press CONTINUE

[S] INITIALIZE
The printer is being initialized to the factory settings.

[E] INSERT IMAGING CRTG
The imaging cartridge is not installed.

[E] INSERT TRAY
The standard paper cassette is not installed.

[E] "INSUFF. MEMORY"
The printer has insufficient memory available for the current task. To correct the error, press CONTINUE. If the message remains, press RESET or initialize the printer.

You can also clear this error by turning the printer off and back on again. However, it may be necessary to simplify the page you are trying to print or add more memory to the printer.

[E] INVALID ASSIGN
If you assign PostScript to more than one channel, this message appears when you attempt to exit from SelecType. Press [◄] to return to MODE ASSIGN and change the assignments.

[E] MASC BUFFER FULL
Text or graphics data has filled the printer's buffer and the printer has ejected an incomplete page. Press CONTINUE to clear the error. You may need to add more memory to your printer.

[S] PAPER FEEDING
The printer is feeding paper.

[E] PAPER JAM
Paper is not being fed into the printer or paper is jammed in the paper path. Open the printer and clear the jammed paper as described later in this chapter.

[E] PAPER OUT
There is no paper in the standard paper cassette or the optional lower paper cassette (if installed). Load more paper into the selected paper cassette.

[E] PAPER OUT AUTO XXX
There is no paper in the standard cassette or the optional lower paper cassette (if installed). The display prompts you to load paper into the specified cassette.

Cl PAPER OUT OPT XXX
There is no paper in the optional lower paper cassette. The display prompts you to load the correct paper size into the lower paper cassette.

[E] PAPER OUT STD XXX
There is no paper in the standard paper cassette. The display prompts you to ioad the correct paper size into the cassette.

[S] PRINTING
The printer has received data and is printing.

[S] PRINTSTOPX/X
The printer stops printing during the multi-copy print operation.

[S] PSCAXP
The printer is using the intelligent emulation switch and is not in a timeout status. It can use either one of the modes shown on the display.

[S] RAM Check X.X ME
The printer is checking the available RAM (X.X = capacity).

[S] READY
The printer is ready to print.

[E] REINSERT CARD
You may have removed an option card while the RED light was still lit or while the printer was on tine. To correct the error, make sure the printer is off line. Next, reinsert card into the correct slot and press CONTINUE.

[E] REMOVE CARD
You may have inserted an option card while the printer was on line or while the FEED light was on. Data still remains in the printer's Buffer. To correct this error, take the printer off line. Then remove the card and press CONTINUE. Before you reinsert the card, make sure that all data in the buffer has been printed and that the printer is off line. If the FEED light is on, press FEED to print any remaining data.

[E] RESELECT TRAY
The optional lower paper cassette unit is not installed and the INPUT option is set to OPT or AUTO. Turn off the printer and install the optional lower paper cassette unit. If you decide not to use the optional paper cassette unit, press CONTINUE to select paper automatically from the standard paper cassette. After printing, change the INPUT option to STD.

[S] RESET
The printer has been reset to the macro specified with the SelecType LOAD MACRO option.

[S] ROM Check
The printer is checking ROM.

[E] SAVE MEMORY OVERFLOW
This message may appear when you are trying to save a macro with the SAVE MACRO option. The painter does not have enough memory to save the macro. To correct this error, delete unused macros using the DELETE MACRO option.

[E] SERVICE REQ. C0XXX
A controller error has been detected. Write down the error number listed on the display and turn off the printer. Wait at least five seconds and then turn it back on. If the error message still appears, turn off the printer, unpiug the power cord, and contact a qualified service person.

[E] SERVICE REQ. E00XX
A print engine error has been detected. Write down the error number listed on the display and turn off the printer. Wait at least five seconds and then turn it back on. If the error message still appears, turn off the printer, unplug the power cord, and contact a qualifies service person.

[E] SET FULL PRINT
This message may appear when you are trying to print graphics or a mix of text and graphics. Press CONTINUE and then change the SelecType FULL PRINT setting.

[W] SET MANUAL
There is no paper in the manual feed tray and you have selected manual feed. Load a sheet of paper in the manual feed tray. To cancel manual feed, press the MANUAL button to feed paper from the paper cassette. This message alternates with CANCEL MANUAL FEED.

[S] STANDBY MODE
If all of the channels received no data for about thirty minutes and you enabled the STANDBY mode in SelecType, the printer enters standby mode. Press any panel button or send data to warm up the printer.

[E] START UP ERROR
If this message appears when you turn on the printer, the power may have been turned off while the printer was performing a save operation. To clear this error, press [◄] or [►] to return the printer's default settings to LT or A4 paper, respectively.

[W] TONER LOW
The printer is almost out of toner. When you see this message, you can still print up to 25 more pages. You must replace the imaging cartridge soon.

[E] TONER OUT
You must replace the imaging cartridge.

[E] TRAY SET AUTO XXX
The paper size setting does not match the paper loaded in the specified paper cassette. The display indicates the expected paper size and the currently selected cassette. You can either change the paper size setting or load the correct paper size. After you correct the paper mismatch, press CONTINUE.

[E] TRAY SET OPT XXX
The specified paper size does not match the paper loaded in the optional lower paper cassette. The display indicates the expected paper size. After you correct the paper mismatch, press CONTINUE.

[E] TRAY SET STD XXX
The specified paper size does not match the paper loaded in the standard paper cassette. The display indicates the expected paper size. After you correct the paper mismatch, press CONTINUE.

[S] WARMING UP
Printer is warming up.

SelecType

The SelecType function on the printer control panel allows you to control most of the printer's functions, such as printing test pages, selecting paper size, and changing the printer's configuration.

SelecType is divided into two levels: Level 1 and Level 2. Level 1 contains everyday printing and font selection functions, and Level 2 contains functions that you are less likely to change frequently, such as printer mode and printer configuration.

Your application program may send printer commands that override the SelecType settings. If you are not getting the results you expect, check your application software settings.

> **Note:** New SelecType settings are in effect only until you turn off the printer unless you save them with the Level 1 SYSTEM CONFIG option or the Level 2 P-CONFIG SAVE option.

Level 1 functions

S: P: O:	Selects the serial, parallel, or optional channel when you have set up more than two interfaces and used the INDIVIDUAL mode.
INPUT	Selects the standard or optional paper cassette.
PAGE SIZE	Specifies the size of paper.
COPIES	Selects the number of copies to be printed.
ORIENT	Selects the printing orientation: portrait **(vertical)** or landscape (horizontal).
FONT	**Selects** one of the fonts available in the current printer mode.
STATUS SHEET	Prints a report listing the current printer settings.
FONT SAMPLE	Prints a sample of the fonts available in the current printer mode.
SUB CONFIG	Defines the printer's subconfiguration; depending on the printer mode, controls such features as symbol set and number of text lines.
SYSTEM CONFIG	**Defines the printer's system configuration;** saves **Level** 1 settings, displays the amount of **memory** remaining, changes top and left offsets, **and enables** printing **of** complex pages.

Level 2 functions

TEST PRINT	Prints two test patterns to check the printer's **operation**.
MODE ASSIGN	Chooses **one** of the emulation modes: **HP** LaserJet III, Epson LQ, Epson FX, or **IES** modes. In the IFS modes, the printer switches automatically between **PostScript** and another mode (if PostScript is available). With an optional identity card, you can also **select** Epson GL or PostScript emulation.
I F CONFIG.	Configures the **parallel** and **serial** interfaces.
RX-BUFFER SIZE	Chooses the size of the receive buffer.
CH	Selects the AUTOSENSE or INDIVIDUAL mode and assigns memory for INDIVIDUAL
TIMEOUT	Defines the auto emulation switch timeout; if no more data is sent during the specified time period, the printer switches from one emulation mode to the other.
CH TIMEOUT	Defines the channel timeout; if no data is sent during the **specified** time period, the printer switches from one channel to the other.
AUTO CONT	Selects automatic continue, which permits the printer to continue printing instead of stopping after certain error conditions occur.
BEEPER	Turns the beeper on or off.
P-CONFIG SAVE	Saves the printer's configuration; saves **all Level 2** settings as defaults so they **take** effect each time you turn on the printer.
FACTORY RESET	Returns **all** Level 1 and Level 2 settings to their factory settings.
VERSION	Displays the **version** numbers of the printer's firmware components such as controller and font.
PAGE COUNTER	Displays the total number of sheets printed by **the** printer.
RITech	Selects one of the settings for Epson's Resolution Improvement Technology, which produces smooth text and graphics.
STANDBY	Conserves energy by reducing power to the **fixer** heater when the printer is not in use for **30** minutes.

Printing a Status Sheet

In addition to the test print patterns, you can print a status sheet that lists the **current** printer **settings.**

> **Note:** The status sheet lists the printer's current settings. If you **change** the macro number setting for the LOAD MACRO option in the SYSTEM **CONFIG** submenu, the status sheet prints out the new **macro** settings. MACRO 0 is the factory default setting.

Follow these steps to print the status sheet:

1. Press SelecType once to enter SelecType Level **1**.

> **Note:** If **you** have already chosen the INDIVIDUAL mode in SelecType and have set up more than one channel, the following option appears on the display (The display shows **available channels** only):
>
> CANCEL:◀ S: P: O:▶
>
> Press any arrow button to choose your channel; then go on to step 2.

2. Press [▼] until **STATUS** SHEET appears on the display.

   ◆STATUS SHEET ▶

3. Press [▶] twice to print the status sheet.
4. Press the SelecType button twice to exit SelecType.

   A portion of tk status sheet printout is shown below.

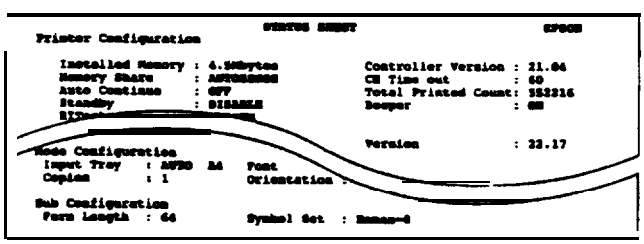

Data Dump Mode

Data dump mode is a special feature that makes it easy for experienced users to find the cause of communication problems between the printer and computer. In data dump mode, the printer produces as exact printout of the codes it receives.

1. Make sure that paper is loaded and the printer is off.
2. Hold down the SelecType button while you turn on the printer. Make sure you hold the button down until you see message HEX DUMP on the display.
3. Next, run any program that causes the printer to print (either an application program or a program written in any programming language). Your printer prints out all the codes it receives in hexadecimal format, as shown below.

```
                 ******** HEX DUMP LIST    ***......          PAGE    1

0000    1B 52 1C 1B 43 45 1B 6B 00 1B 70 00 1B 63 0C 1B   .R..CE.k..p..c..
0001    74 01 1B 32 54 72 6F 75 62 6C 65 20 73 68 6F 6F   t..2Trouble shoo
0002    74 69 6E 67 20 20 20 20 20 0D 0A 54 68 69 73 20   ting     ..This
0003    63 68 61 70 74 65 72 20 64 69 73 63 75 73 73 65   chapter discusse
0004    73 20 70 72 6F 62 6C 65 6D 73 20 79 6F 75 20 6D   s problems you m
0005    61 79 20 65 6E 63 6F 75 6E 74 65 72 20 61 6E 64   ay encounter and
0006    20 74 68 65 69 72 20 6C 69 6B 65 6C 79 20 73 6F    their likely so
0007    6C 75 74 69 6F 6E 73 2E 20 0D 0A 0D 0A 49 66 20   lutions. ....If
0008    61 6E 20 65 72 72 6F 72 20 6F 63 63 75 72 73 2C   an error occurs,
0009    20 79 6F 75 72 20 62 65 73 74 20 73 6F 75 72 63    your best sourc
000A    65 20 6F 66 20 69 6E 66 6F 72 6D 61 74 69 6F 6E   e of information
000B    20 0D 0A 69 73 20 74 68 65 20 64 69 73 70 6C 61    ..is the displa
000C    79 20 6F 6E 20 74 68 65 20 63 6F 6E 74 72 6F 6C   y on the control
000D    20 70 61 6E 65 6C 2E 20 0D 0A                      panel. ..
```

4. To turn off the data dump mode and stop printing, press ON LINE to set the printer off line. (If you press ON LINE while a page is being printed, the green ON LINE light flashes until the page is ejected and the printer goes off line.) To exit the data dump mode, turn off the printer.

Look at the sample data dump printout. By reading the characters printed in the text field on the right side of the data dump printout or the printout of hexadecimal codes, you can check what codes are being set to the printer. In the text field, printable characters appear as their true ASCII characters. Non-printable codes, such as control codes, are represented by dots.

To interpret a data dump printout, look at the first two hexadecimal codes on line 0004 of the printout sample (73 to). Code 73 represents the letter s; code 20 represents a space. Check the fifth line of the text field on the right side of the printout and you will find the letter s followed by a space.

Information Reference List

Engineering Change Notices

None.

Product Support Bulletins

None.

Technical Information Bulletins

None.

Related Documentation

TM-EPL8000	EPL-8000 Service Manual
PL-EPL8000	EPL-8000 Parts Price List
SPKEPL8000	EPL-8000 Self Paced Kit
4000834 G01-00	EPL-8000 User's Guide
4000835 G01-00	EPL-8000 Quick Setup & Maintenance Guide