Epson PowerLite® 1925W

MULTIMEDIA PROJECTOR

Wireless, widescreen performance.

Get brilliant widescreen presentations that will wow any audience — it's easy with the ultra bright, network-ready Epson PowerLite 1925W. This powerful projector yields vivid, high quality images, yet still includes a host of user-friendly features, such as a wireless module for easy wireless setup. With Epson 3LCD technology and 4000 lumens of color/white light output[1], your presentations will pop in any setting. With HDMI digital connectivity, and WXGA resolution, you can project HD movies and more.

Larger-than-life images — native WXGA resolution (16:10); ideal for widescreen computers
Incredible image quality, anytime, day or night — 4000 lumens color light output, 4000 lumens white light output[1]

The best selling projectors #1 Epson Projectors in the world

Epson PowerLite® 1925W MULTIMEDIA PROJECTOR

The best-selling projectors in the world.

Epson offers a wide range of high-quality projectors to meet almost any need. Built with image quality and reliability in mind, Epson projectors enhance communication and inspire collaboration, while offering a low total cost of ownership. From ultraportable projectors designed for educational settings to boardroom-ready business projectors, Epson has the model made for you.

3LCD technology — for quality and color that's beyond amazing

Innovative technology with proven reliability

- 3 chips for full-time, vibrant color
- 25% less electricity required per lumen of brightness when compared to 1-chip DLP projectors[2]
- Road-tested reliability from a company with over 20 years of experience

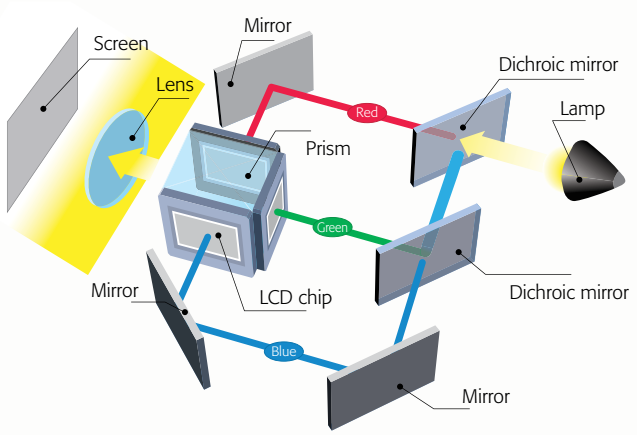

3LCD, 3-chip technology

Amazing light output

- 4000 lumens color light output and 4000 lumens white light output[1]
- High color light output for bright, balanced, colorful images
- White light output that's measured using ISO 21118 (a more rigid standard than the outdated ANSI lumens rating used by competitive products)

High color light output Low color light output

Actual photographs of images taken from two competing projectors run in default mode. Price, resolution and brightness (white light output) are the same for both projectors.

Compact and portable design

Energy-efficient E-TORL® lamp, exclusively from Epson

- Delivers more lumens per watt and lasts up to 3500 hours[3]
- Minimizes both light diffraction and light leakage
- E-TORL lamps maximize your presentation time, while minimizing your costs

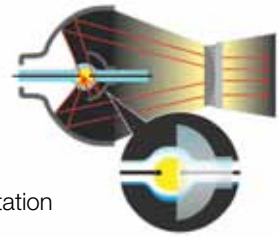

E-TORL lamp

Eco features

- Energy-efficient 3LCD light engine
- Energy-efficient E-TORL lamp
- Designed to be recycled[4]
- RoHS compliant

Better Products for a Better Future™

For more information on Epson's environmental programs, go to eco.epson.com

Precision control

USB Plug ’n Play instant setup

- No more pressing computer function keys or carrying bulky VGA cables
- Just plug in a standard USB cable and instantly project video with audio from your PC!
- This USB connection also enables you to maintain control over your presentation with the page up/page down function on the remote control

Fast, easy setup and control

- **Instant Off®** — no cool-down time required, so it’s ready to shut down when you are
- **A/V Mute Slide** — control your presentation; it’s right at your fingertips
- **Sleep Mode** — set from 1 to 30 minutes to save energy when the A/V Mute Slide is closed or no signal is detected
- **1.6x optical zoom** — offers great positioning flexibility
- **Direct Power On/Off** — power the projector on and off with the flip of a wall switch

Epson’s leading-edge EasyMP® network technology

Built-in wireless features

- Present wirelessly using the 802.11 a/b/g module via a PC or Mac®; transmit audio as well
- With the broadest security protection, the PowerLite 1925W is ideal for corporate applications; compatible with LEAP, PEAP, WPA2 and more
- Use the optional Wi-Fi® Quick Connect key for faster wireless setup (PC only)

PC-free presentations

- Connect a memory device and start your presentation — all without a PC
- Display MPEG2 and MPEG4 videos as well as photos
- Compatible with a whole host of file formats (JPEG, GIF, BMP, PNG)

Easy Management®

- Remotely access, monitor and control projectors over the network; centralized control
- Enjoy easy management and maintenance via Simple Network Management Protocol (SNMP)
- Send e-mail notifications to alert network administrators when there are issues related to the temperature, fan and lamp status

PowerLite 1925W Features

- **Brilliant detail — 720p resolution and up to 2000:1 contrast ratio**
- **Convenient network accessibility — display images over the IP network from any networked location**
- **Powerful sound and communication features, no added cost — built-in 10 W speaker, built-in closed captioning decoder**
- **Cutting-edge connectivity — RJ-45 LAN connection, HDMI port with HDCP for digital connectivity**
- **Easy picture adjustments and greater positioning flexibility — 1.6x manual zoom with powered focus, controllable via the remote or RS-232**
- **Message broadcasting — broadcasts customized images/alerts over the network for announcements or instructions**
- **Added security in any environment — convenient metal anchor bar, control panel lockout**
- **Easy maintenance — easy, side-loading lamp and one-touch filter replacement**
- **Protect your investment — recommended 2500-hour filter cleaning cycle[5]**
- **Outstanding support — two-year limited warranty**
- **Carrying case included — for easy portability and protection when stored**

Screen Fit

A Quick Setup function with an auto-sensing feature that intuitively sets up the appropriate screen size, keystone and focus — all at the touch of a button.

Brilliant image quality and detail

Resolution defines the level of detail and depth you’ll see in a projected image. It’s measured as the number of pixels high by the number of pixels wide. The more pixels, the better the image quality.

800 x 600
Meets basic projection needs

1024 x 768
Ensures sharper detail

1280 x 800
Offers the highest quality and is ideal for widescreen (16:10) display

EPSON®
EXCEED YOUR VISION

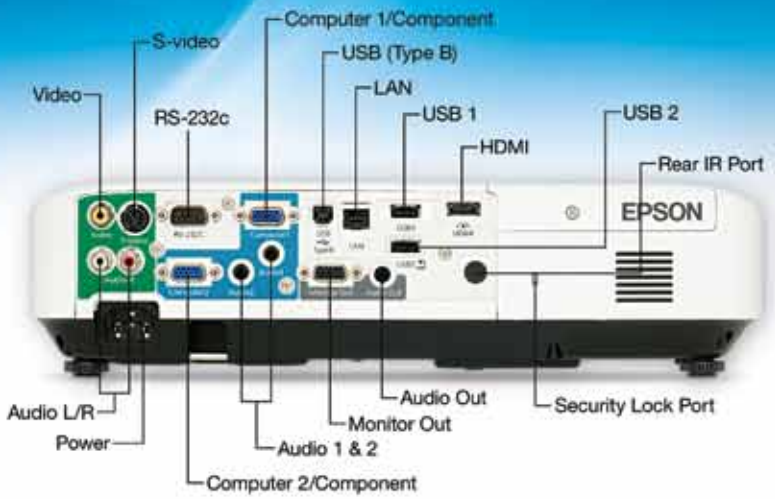

Epson PowerLite® 1925W

MULTIMEDIA PROJECTOR

Product Name	Product Code	UPC
PowerLite 1925W	V11H314020	0 10343 87476 3
Replacement Lamp	V13H010L53	0 10343 87483 1
Replacement Air Filter	V13H134A24	0 10343 87484 8

Specifications

Projection System
Epson 3LCD, 3-chip optical engine

Projection Method
Front/rear/ceiling mount

Driving Method
Epson Poly-silicon TFT Active Matrix

Pixel Number
1,024,000 dots (1280 x 800) x 3

White Light Output[1]
4000 lumens (ISO 21118 Standard)

Color Light Output[1]
4000 lumens

Aspect Ratio
16:10

Native Resolution
1280 x 800 (WXGA)

Resize
640 x 480 (VGA), 800 x 600 (SVGA),
1024 x 768 (XGA), 1152 x 864 (SXGA),
1440 x 900 (WSXGA), 1680 x 1050 (WSXGA+),
1400 x 1050 (SXGA+), 1600 x 1200 (UXGA)

Lamp Type
E-TORL 230 W UHE

Lamp Life[3]
Up to 3500 hours (ECO Mode)
Up to 2500 hours (Normal Mode)

Throw Ratio Range
1.62 – 2.61

Size (projected distance)
30" – 300" 16:10 aspect (3' – 50.6')

Keystone Correction Automatic
Vertical: ± 30 degrees, (± 45 manual)
Horizontal ± 20 degrees, (± 30 manual)

USB Plug 'n Play
Mac compatible via DVI to VGA adapter (not included)
USB Plug 'n Play for Windows® 2000 or later

Contrast Ratio
Up to 2000:1

Color Reproduction
16.77 million colors

Projection Lens

Type
Powered focus
Manual (optical) zoom

F-number	Focal Length
1.75 – 2.42	24 mm – 38.2 mm

Zoom Ratio
Optical zoom 1.0 – 1.6

Other

Display Performance
NTSC: 480 lines
PAL: 560 lines
(Depends on observation of the multi-burst pattern)

Input Signal
NTSC/NTSC4.43/PAL/M-PAL/N-PAL/PAL60/SECAM

Interfaces
Computer/component video: D-sub 15 pin x 2
S-video: Mini DIN x 1
Composite video: RCA x 1
Audio in x 3 (RCA (L&R) x 1, mini stereo x 2)
Variable audio out: mini stereo x 1
USB connector: Type-B x 1 (USB display and mouse/keyboard control), Type A x 2 (for USB memory device/Epson doc camera)
Serial: RS-232c x 1
LAN networking: RJ-45 x 1
Monitor out: Mini D-sub 15 pin x 1
Wireless LAN port: 802.11 a/b/g

Speaker
10 W (mono)

Operating Temperature
41 ˚ to 95 ˚F (5 ˚ to 35 ˚C)

Power Supply Voltage
100 – 240 V ±10%, 50/60 Hz

Power Consumption
341 W
Communication on: 5.5 W standby
Communication off: 0.2 W standby

Fan Noise
29 dB (ECO Mode)
37 dB (Normal Mode)

Security
Kensington®- style lock provision, security anchor bar

Dimension (W x D x H)

Including feet: 14.1" x 10.12" x 3.74"
Excluding feet: 14.1" x 10.12" x 3.4"
Weight: 7.82 lb

Remote Control

Features
Search, comp, video, USB, LAN, power, aspect, color mode, volume, e-zoom, A/V mute, freeze, menu, page up and down, help, auto, mouse functions, user, ID num, pointer, esc, enter

Operating Angle	Operating Distance
Right/left: ± 30 degrees	26' (8 m)
Upper/lower: ± 30 degrees	

Support — The Epson Connection℠

Pre-sales support	
U.S. and Canada	800-463-7766
Internet website	www.epson.com

Service Programs
Two-year projector limited warranty, Epson Road Service program, Epson PrivateLine® dedicated toll-free support and 90-day lamp limited warranty

What's In The Box
Power cord, computer cable (VGA), USB cable, wireless LAN unit, soft carrying case, projector remote control, batteries, user manual CD, projector software CD, Quick Setup Sheet, PrivateLine support card, and password protection sticker

Accessory Part Numbers

Replacement wireless LAN module	V12H306P11
Quick Wireless Connection USB key	V12H005M06
Universal projector ceiling mount	ELPMBPJF
Advanced projector ceiling mount	ELPMBPRG
High-security projector ceiling mount	ELPMBATA
Adjustable suspended ceiling channel kit	ELPMBP01
False ceiling plate kit	ELPMBP02
Structural round ceiling plate	ELPMBP03
Adjustable extension column (pipe) 8" – 11"	ELPMBC01
Component to VGA video cable	ELPKC19
S-video cable	ELPSV01
SwissGear® backpack	ELPKS63
50" portable screen	ELPSC06
60" portable pop-up screen	ELPSC07
80" portable pop-up screen	ELPSC08
Duet™ screen	ELPSC80
Epson DC-06 document camera	V12H321001
Kensington security lock	ELPSL01
Distribution amplifier	ELPDA01
Replacement lamp	V13H010L53
Replacement air filter	V13H134A24

[1]Light output varies depending on modes (color and white light output). White light output measured using ISO 21118 standard.
[2]Data source: ProjectorCentral.com, Jan. 2009. Average of 796 shipping models, for which manufacturers provided lumens and total power data, all resolutions and brightness levels.
[3]Lamp life will vary depending upon mode selected, environmental conditions and usage. Lamp brightness decreases over time.
[4]See our website for convenient and reasonable recycling options at www.epson.com/recycle
[5]Recommendation based on normal room conditions. Cleaning requirements may vary depending on use, environment and other conditions. Cleaning intervals may be adjusted to accommodate the environment in which the projector is used.

Epson America, Inc.
3840 Kilroy Airport Way, Long Beach, CA 90806

Epson Canada, Ltd.
3771 Victoria Park Avenue, Toronto, Ontario M1W 3Z5

www.epson.com
www.epson.ca

Specifications and terms are subject to change without notice. Epson, Easy Management, EasyMP, E-TORL and Instant Off are registered trademarks, Epson Exceed Your Vision is a registered logo-mark and Better Products for a Better Future is a trademark of Seiko Epson Corporation. PowerLite and PrivateLine are registered trademarks, Duet is a trademark and Epson Connection is a service mark of Epson America, Inc. All other product and brand names are trademarks and/or registered trademarks of their respective companies. Epson disclaims any and all rights in these marks.
Copyright 2009 Epson America, Inc. CPD-30493 10/09