EPSON

TM-m50Ⅱ-H

Technical Reference Guide

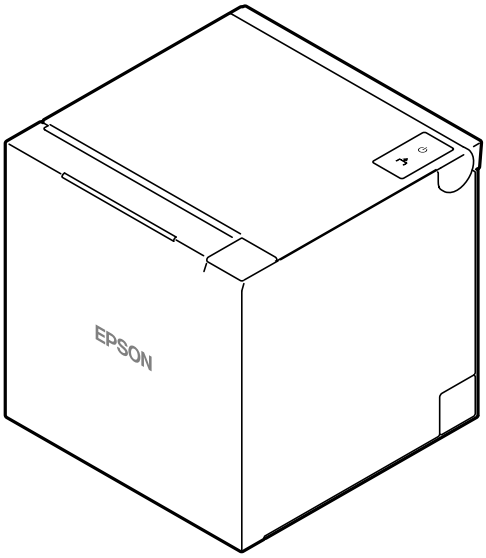

Product Overview

Describes features of the product.

Setup

Describes setup and installation of the product and peripherals.

Advanced Usage

Describes advanced usage methods for the product.

Application Development Information

Describes how to control the printer and necessary information when you develop applications.

Handling

Describes how to handle the product.

Appendix

Describes general specifications and character code tables.

M00153805
Rev. F

Cautions

- No part of this document may be reproduced, stored in a retrieval system, or transmitted in any form or by any means, electronic, mechanical, photocopying, recording, or otherwise, without the prior written permission of Seiko Epson Corporation.
- The contents of this document are subject to change without notice. Please contact us for the latest information.
- While every precaution has been taken in the preparation of this document, Seiko Epson Corporation assumes no responsibility for errors or omissions.
- Neither is any liability assumed for damages resulting from the use of the information contained herein.
- Neither Seiko Epson Corporation nor its affiliates shall be liable to the purchaser of this product or third parties for damages, losses, costs, or expenses incurred by the purchaser or third parties as a result of accident, misuse, or abuse of this product or unauthorized modifications, repairs, or alterations to this product, or (excluding the U.S.) failure to strictly comply with Seiko Epson Corporation's operating and maintenance instructions.
- Seiko Epson Corporation shall not be liable for any damages or problems arising from the use of any options or any consumable products other than those designated as Genuine Epson Products or Epson Approved Products by Seiko Epson Corporation.

Trademarks

Microsoft and Windows are registered trademarks of Microsoft Corporation in the United States and/or other countries.

Wi-Fi®, WPA™, WPA2™, and WPA3™ are either registered trademarks or trademarks of Wi-Fi Alliance®.

The Bluetooth® word mark and logos are registered trademarks owned by Bluetooth SIG, Inc. and any use of such marks by Seiko Epson Corporation is under license.

IOS is a trademark or registered trademark of Cisco in the U.S. and other countries and is used under license.

Apple, Apple TV, Apple Watch, iPad, iPad Air, iPad Pro, iPhone, and Lightning are trademarks of Apple Inc., registered in the U.S. and other countries. tvOS is a trademark of Apple Inc.

iBeacon and macOS are trademark of Apple Inc., registered in the U.S. and other countries.

Android™ is a trademark of Google LLC.

Google Play and the Google Play logo are trademarks of Google LLC.

QR Code is a registered trademark of DENSO WAVE INCORPORATED in Japan and other countries.

All other trademarks are the property of their respective owners and used for identification purpose only.

ESC/POS Command System

Epson ESC/POS is a proprietary POS printer command system that includes patented or patent-pending commands. ESC/POS is compatible with most Epson POS printers and displays.

ESC/POS is designed to reduce the processing load on the host computer in POS environments. It comprises a set of highly functional and efficient commands and also offers the flexibility to easily make future upgrades.

©Seiko Epson Corporation 2023–2026

For Safety

Key to Symbols

The symbols in this manual are identified by their level of importance, as defined below. Read the following carefully before handling the product.

⚠ **WARNING**	You must follow warnings carefully to avoid serious bodily injury.
⚠ **CAUTION**	Provides information that must be observed to prevent damage to the equipment or loss of data. • Possibility of sustaining physical injuries. • Possibility of causing physical damage. • Possibility of causing information loss.
CAUTION	Provides information that must be observed to avoid damage to your equipment or a malfunction.
NOTE	Provides important information and useful tips.

Warnings

⚠ **WARNING**	• **Handle the power cable with care.** Improper handling may lead to fire or electric shock. ∗ Do not modify or attempt to repair the cable. ∗ Do not place any heavy object on top of the cable. ∗ Avoid excessive bending, twisting, and pulling. ∗ Do not place the cable near heating equipment. ∗ Check that the plug is clean before plugging it in. ∗ Be sure to push the plug all the way in. • **Be sure to use the specified power source.** Connection to an improper power source may cause fire or shock. • **Be sure your AC cable meets the relevant safety standards and includes a power system ground terminal (PE terminal).** Otherwise shock may result. • **Do not place multiple loads on the power outlet.** Overloading the outlet may lead to fire. • **Shut down your equipment immediately if it produces smoke, a strange odor, or unusual noise.** Continued use may lead to fire. Immediately unplug the equipment and contact qualified service personnel. • **Never disassemble or modify this product.** Tampering with this product may result in injury or fire. • **Do not allow foreign matter to fall into the equipment.** Penetration by foreign objects may lead to fire.

WARNING

- **If water or other liquid spills into this equipment, do not continue to use it.**
  Continued use may lead to fire. Unplug the power cord immediately and contact qualified service personnel.
- **Do not use aerosol sprayers containing flammable gas inside or around this product.**
  Doing so may cause fire.
- **Do not use this product in locations subject to high humidity or dust levels.**
  Excessive humidity and dust may cause equipment damage or fire.

Cautions

CAUTION

- **Do not connect cables in ways other than those mentioned in this manual.**
  Different connections may cause equipment damage.
- **Be sure to set this equipment on a firm, stable, horizontal surface.**
  The product may break or cause injury if it falls.
- **Do not place heavy objects on top of this product. Never stand or lean on this product.**
  Equipment may fall or collapse, causing breakage and possible injury.
- **Take care not to injure your fingers on the manual cutter**
  * When you remove printed paper
  * When you perform other operations such as loading/replacing roll paper
- **Do not open the roll paper cover without taking the necessary precautions, as this can result in injury from the autocutter fixed blade.**
- **To ensure safety, unplug this product before leaving it unused for an extended period.**
- **To avoid risk of electric shock, do not set up this product or handle cables during a thunderstorm.**
- **Never insert or disconnect the power plug with wet hands.**
  Doing so may result in severe shock.
- **Never attempt to repair this product yourself.**
  Improper repair work can be dangerous.
- **Do not touch the paper during printing or before the paper has been cut.**
  Doing so may result a paper jam or an autocutter error (paper cannot be cut).
- **If used for self-service terminals, take precautions to prevent users from holding the paper or blocking the paper exit with their hands during printing.**

CAUTION

If this product is used in a place where silicon-based gases including siloxane (silicon adhesive, silicon oil, silicon powder, etc.) or malignant gases (nitric acid, hydrogen sulfide, ammonia, chlorine, etc.) are present in the air, contact failure may occur in mechanical contacts such as mechanical switch or DC motor in a short time due to adhesion or oxidation of the insulation film.

Caution Labels

The caution labels on the product indicate the following precautions.

CAUTION:

Do not touch the thermal head and its surroundings during use or immediately after use. After printing, the thermal head and its surroundings can be very hot.

Restriction of Use

When this product is used for applications requiring high reliability/safety, such as transportation devices related to aviation, rail, marine, automotive, etc.; disaster prevention devices; various safety devices, etc.; or functional/precision devices, etc., you should use this product only after giving consideration to including fail-safes and redundancies into your design to maintain safety and total system reliability. Because this product was not intended for use in applications requiring extremely high reliability/safety, such as aerospace equipment, main communication equipment, nuclear power control equipment, or medical equipment related to direct medical care, etc., please make your own judgment on this product's suitability after a full evaluation.

Open Source Software License

This product uses open source software in addition to Epson proprietary software.

For information of the open source software used in this product, see the following URL.

http://xxx.xxx.xxx.xxx/PRESENTATION/ADVANCED/LICENSE/TOP

For “xxx.xxx.xxx.xxx” in the above URL, input your printer’s IP address.

Notes on Wi-Fi/Bluetooth® Interfaces

Effects of Radio Wave Radiation on the Environment

This product is equipped with a radio module that has been certified as a radio facility for low-power data communication systems based on the Radio Law. The electromagnetic energy emitted by the radio module in this product is much lower than that emitted by other wireless devices (such as cell phones).

However, in certain environments where there is a risk of interference to other devices or services, the use of this product may be restricted by the owner of the building or person in charge of the organization. In a particular environment, such as in an airport, if you are not sure whether the use of your wireless device will be restricted, inquire about permission to use this product before turning it on.

Notes on Interference

- When setting up or using this product, be sure to follow the instructions in this manual.
  Setting up or using this product without following this manual may cause harmful interference to other wireless communications.
- If this product causes harmful interference to radio or television reception, the user is encouraged to try to correct the interference by one or more of the following measures.
  - Change the direction and location of the TV/radio receiving antenna
  - Install the product away from the TV/radio
  - Connect this product to an outlet other than the one to which the TV/radio is connected
  - Talk to an experienced radio/TV technician
- Please take the following points into consideration when using the product in an environment where there are devices that generate radio interference, such as microwave ovens.
  - Install the product as far away as possible from devices that may cause radio interference.
  - Use channels that are away from frequency bands that cause radio interference.
  - Install a shielding board between this product and devices that generate radio wave interference.
  - Use a frequency band that will not cause interference, either 2.4 GHz or 5 GHz.
  - When setting the auto channel of the access point, make sure that this product is not set to a channel that causes radio interference.
- Do not attempt to disassemble or modify this product.
  We assume no responsibility whatsoever for any harmful interference to other wireless communications caused by unauthorized modification.

Notes on Wireless LAN Connection

This product has not been confirmed to work with all wireless LAN devices, and operation with all wireless LAN devices is not guaranteed.

Notes on Wireless LAN Security

The following are important matters concerning your rights (privacy protection).

Instead of using LAN cables, wireless LANs use radio waves to exchange information, which has the advantage of allowing free LAN connections within the range of the radio waves. On the other hand, radio waves can reach anywhere within a certain range, even over obstacles (walls, etc.), so if no security settings are made, the following problems may occur.

Having your information stolen

There is a possibility that a malicious third party may intentionally intercept radio waves and steal personal information such as IDs, passwords or credit card numbers, as well as communication contents such as the contents of emails.

Access from unauthorized users

A malicious third party may gain unauthorized access to your personal or company network to do the following.

- Taking out personal or confidential information (information leakage)
- Communicating by impersonating a specific person and distributing fraudulent information (spoofing)
- Rewriting and sending intercepted communications (tampering)
- Destroy data and systems by spreading computer viruses, etc. (Destruction)

Essentially, wireless LAN cards and wireless access points have a security mechanism to deal with these problems, so by using the product with the settings related to the security of the wireless LAN product, the possibility of such problems occurring will be reduced. It is recommended that you fully understand the problems that may occur if you do not configure the security settings, and use the product after configuring the security settings at your own discretion and responsibility.

Notes on SSID (Service Set Identifier) Settings

For security reasons, please observe the following precautions regarding SSID settings.

- Make sure to change the SSID from the default setting.
- Do not set the SSID to a string that can identify the owner.

Notes on Setting the Encryption Key

For security reasons, please observe the following precautions when setting the encryption key.

- Avoid using words from the dictionary as much as possible.
- Combine meaningless alphanumeric characters and symbols.
- Use a string of at least 13 characters, preferably 20 characters or more.

Manuals for This Product

The following manuals are available for this product.

Paper manual	**Manuals, such as Setup Guide, included in the product package** Explains how to install and set up this product, from checking the bundled items. Precautions for handling this product are also provided. To ensure safe and correct use and to prevent harm to you or others, or damage to property, please read the paper manuals before using the product.
Manuals viewed on computers and smart devices	**User's Manual** Describes the functions of this product, how to operate it, information on maintenance, and how to solve various problems. In addition to the URL below, you can also access it from the QR code attached to the product itself. ☞ https://support.epson.net/publist/bsredirect.php?code=M001537 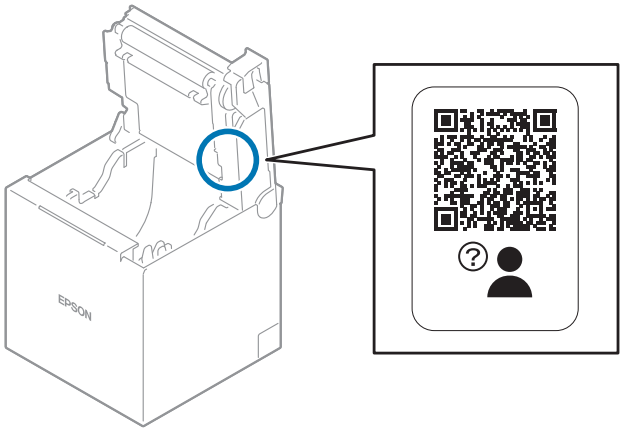
Manuals viewed on computers	**TM-m50II-H Technical Reference Guide (this manual)** Describes information necessary to set up this product, perform daily tasks, and develop your own system.
Manuals viewed on computers and smart devices	**Web video manual** Explains in an easy-to-understand manner how to set up this product and how to connect this product via Wi-Fi or Bluetooth. You can access the manual from the URL below. ☞ https://support.epson.net/p_doc/9a5/ The contents of the videos are subject to change without notice.

About this Manual

Aim of the Manual

This manual was created to provide information on development, design, and installation of POS systems and development and design of printer applications for developers.

Manual Content

The manual is made up of the following sections:

Chapter 1	Product Overview
Chapter 2	Setup
Chapter 3	Advanced Usage
Chapter 4	Application Development Information
Chapter 5	Handling
Appendix	Product Specifications Specifications of Interface and Connector Bluetooth Low Energy Technology Advertising Character Code Tables Compatibility with USB-A

Contents

■ **For Safety** **3**
Key to Symbols 3
Warnings 3
Cautions 4
■ **Caution Labels** **4**
■ **Restriction of Use** **5**
■ **Open Source Software License** **5**
■ **Notes on Wi-Fi/Bluetooth® Interfaces** **6**
Effects of Radio Wave Radiation on the Environment 6
Notes on Interference 6
■ **Notes on Wireless LAN Connection** **7**
Notes on Wireless LAN Security 7
Notes on SSID (Service Set Identifier) Settings 7
Notes on Setting the Encryption Key 7
■ **Manuals for This Product** **8**
■ **About this Manual** **9**
Aim of the Manual 9
Manual Content 9
■ **Contents** **10**

Product Overview ***15***

■ **Features** **15**
■ **Product Configurations** **17**
Models 17
NFC Tag 17
Included 17
Options 17
■ **Part Names and Functions** **18**
Body 18
Panel LED 19
Connectors 20
Online and Offline 21
■ **Status and Errors** **22**
Status Display 22
Network Connection Status 23
Bluetooth Connection Status 24
Error Status 24
■ **NV Memory (Non-Volatile Memory)** **26**
NV Graphics Memory 26
User NV Memory 26

Memory Switches (customized values) 26
R/E (Receipt Enhancement) 26
Maintenance Counter 27

■ **Simple Setup for Wireless LAN 28**

About SimpleAP 29
About Wi-Fi Direct 29

■ **Useful Functions for Smart Devices 30**

NFC Tag 30
QR Code 30

■ **Printing Using Multiple Interfaces 31**

■ **USB-PD and Network Tethering 32**

USB-PD Function 32
Network Tethering 33
Available Smart Devices and Notes 37

■ **Roll Paper Near-End Detection Function 39**

Setup 40

■ **Flow of Setup 40**

■ **Installing the Printer 41**

■ **Changing the Paper Width 42**

■ **Connecting the Optional Wireless LAN Unit 43**

■ **Connecting the Optional Customer Display 44**

■ **Connecting the Optional External Buzzer 45**

Attachment Position 45

■ **Connecting the Cash Drawer 46**

Required specifications of cash drawers 46
Connecting the drawer kick cable 47

■ **Connecting to the Power Source 48**

Connection Procedure 48

■ **Connecting the Printer to the Host Devices 50**

USB-B Interface 50
USB-PD Interface 50
Ethernet Interface 50
Bluetooth Interface 53
Wireless LAN Interface 57

■ **Routing Cables in Various Directions 62**

Passing Cables through the Rear Center 63
Passing Cables through the Left or Right 63
Passing Cables through the Bottom 64

Advanced Usage *65*

■ **Software Settings** **65**

Overview of Each Function 67

■ **MAC Address Confirmation** **77**

■ **Setting/Check Modes** **78**

Self-test Mode 80
NV Graphics Information Print Mode 81
Receipt Enhancement Information Print Mode 81
Software Setting Mode 82
Restore Default Values Mode 83
Interface Setup Mode 84
TM-Intelligent Settings Information Print Mode 87
Peripheral Device Information Print Mode 88
Hexadecimal Dumping Mode 88

■ **Printing a Status Sheet** **90**

■ **Resetting the Interface Settings** **92**

■ **TM-Intelligent Function** **93**

Server direct print 93
Status Notification 93

■ **Web Config** **94**

How to Start Web Config 94
What can be Configured in Web Config 94

Application Development Information *95*

■ **Controlling the Printer** **95**

ePOS-Print XML 95
ePOS-Device XML 95
ESC/POS 95

■ **Controlling the Cash Drawer** **96**

■ **Controlling the Optional External Buzzer** **97**

■ **Software** **98**

Development Kit 98
Drivers 99
Utilities 100
Others 100
Download 101

■ **Precautions when Developing Applications** **102**

Power Button Settings 102
Minimum Paper Length when Cutting 103
Notes on Printing Barcodes and Two-Dimensional Symbols 103
Application Development and Distribution for iOS 103

■ **Automatic Certificate Update Feature** **104**

Overview 104
Implementation 105
Operation Check 106

Handling *107*

■ **Turning the Power On/Off** **107**

Turning the Power On 107
Turning the Power Off 107

■ **Removing the Printer Covers** **108**

When Ejecting Paper Upward 108
When Ejecting Paper Frontward 109

■ **Attaching the Printer Covers** **110**

For Ejecting Paper Upward 110
For Ejecting Paper Frontward 111

■ **Installing Roll Paper** **112**

When Ejecting Paper Upward 112
When Ejecting Paper Frontward 114

■ **Removing Jammed Paper** **116**

■ **Roll Paper Cover does not Open** **117**

■ **Cleaning the Printer** **118**

Cleaning the Printer Case 118
Cleaning the Thermal Head/Platen Roller 118

■ **Preparing for Transport** **119**

■ **When Using the Printer for a Self-Service Terminal** **120**

Notes on Cutting Paper Completely 120

Appendix *121*

■ **Product Specifications** **121**

Printing Specifications 123
Character Specifications 124
Paper Specifications 126
Printable Area 127
Printing and Cutting Positions 128
Electrical Characteristics 128
Environmental Conditions 129
External Dimensions 130

■ **Specifications of Interface and Connector** **133**

USB Interface 133
Network Interface 136
Bluetooth Interface 139

NFC Tag 142

■ **Bluetooth Low Energy Technology Advertising 143**

Introduction 143
Dongle specifications 143
Procedure 143
Changing the Bluetooth Low Energy Technology Advertising Packet 144

■ **Character Code Tables 155**

■ **Compatibility with USB-A 156**

Product Overview

This chapter describes features of the product.

Features

Printing

- High speed receipt printing is possible (500 mm/s maximum).
- By using the "Batch rotate print (Upside Down)" function, you can print pages upside down to make it easier to read the pages when they are ejected from the front side of the printer.
- Supports a variety of language (code pages)

Handling

- Compact and lightweight
  When ejecting paper upward: 127 x 127 x 130 mm (5.0 × 5.0 × 5.1")
  When ejecting paper frontward: 127 x 128 x 129 mm (5.0 × 5.0 × 5.1")
  Approx. 1.3 kg {2.8 lb}
- Easy drop-in paper loading.
- Equipped with an anti-curl function that prevents roll paper from curling.
- Equipped as standard with a near-end detector that can be used regardless of whether the paper ejection direction is up or forward.
- All models are capable of wired communication and high-speed charging with an iOS device, or Android and Windows devices that support USB-PD (USB Power Delivery).
- Offers Wi-Fi (IEEE802.11a/b/g/n/ac) and Bluetooth (Bluetooth 5.0 Dual mode) functions as standard depending on the model.
- Ethernet, Wi-Fi, and Bluetooth connection status can be easily checked by viewing respective LED lights.
- The USB-C connector (USB-PD compatible) for connecting a smart device can supply up to 18W (12 V/1.5 A or 9 V/2 A).
- Paper eject position are selectable from top and front.
- Optional wall hanging bracket is available to attach the printer to a wall.
- Peripheral devices such as customer display, wireless LAN unit, external optional buzzer, and handy scanner can be connected.
- A utility for iOS/Android™ (Epson TM Utility) for making printer settings is provided.

Functions

- Offers the network tethering function.
- Offers network connection check function.
- TM-Intelligent function is equipped.
  - Supports Server Direct Print that sends a request for print data from the product to the Web server at regular intervals.
  - Supports status notification function, which enables the printer to send its status to a web server at regular intervals.
- Information necessary for connecting to the printer can be obtained using the NFC tag built in the printer or a QR code printed on a status sheet.
- Printing is possible through multiple built-in interfaces. See "Printing Using Multiple Interfaces" on page 31 for more details.
- Printing of various types of bar codes, GS1-DataBar, and two-dimensional symbols (PDF417, QR code, MaxiCode, Composite Symbology, Aztec Code, DataMatrix) is supported.
- A maintenance counter function is supported.
- The cutting method can be selected between partial cut (leaving one point in the center uncut) and full cut.
- Enables automatic registration and periodic update of security certificates for printers. (when using the automatic CA-signed certificates update function in application software using Epson ePOS SDK for JavaScript)

Environment

- Paper saving function is available.

Product Configurations

Models

Wi-Fi + Bluetooth model

NFC Tag

You can select the printer you want to use by simply placing an NFC device over the NFC tag (mark) on the printer. There is a limit to the distance over which communication is possible. See "NFC Tag" on page 142.

NOTE

- There is no data rewriting function.
- Use Epson ePOS SDK to build this function into your application.

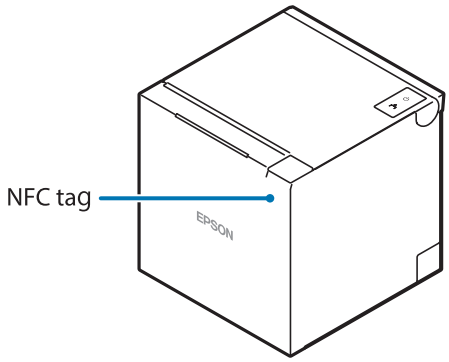

Included

- 58 mm width roll paper guides
- 80 mm width roll paper (for operation check)
- AC adapter
- AC cable
- Manuals

Options

- Wireless LAN cable set (Model: OT-WL06)
- Customer display (Model: DM-D30/DM-D70)
- Optional external buzzer (Model: OT-BZ20)
- Wall Hanging Bracket Set (Model: OT-WH30)

Part Names and Functions

Body

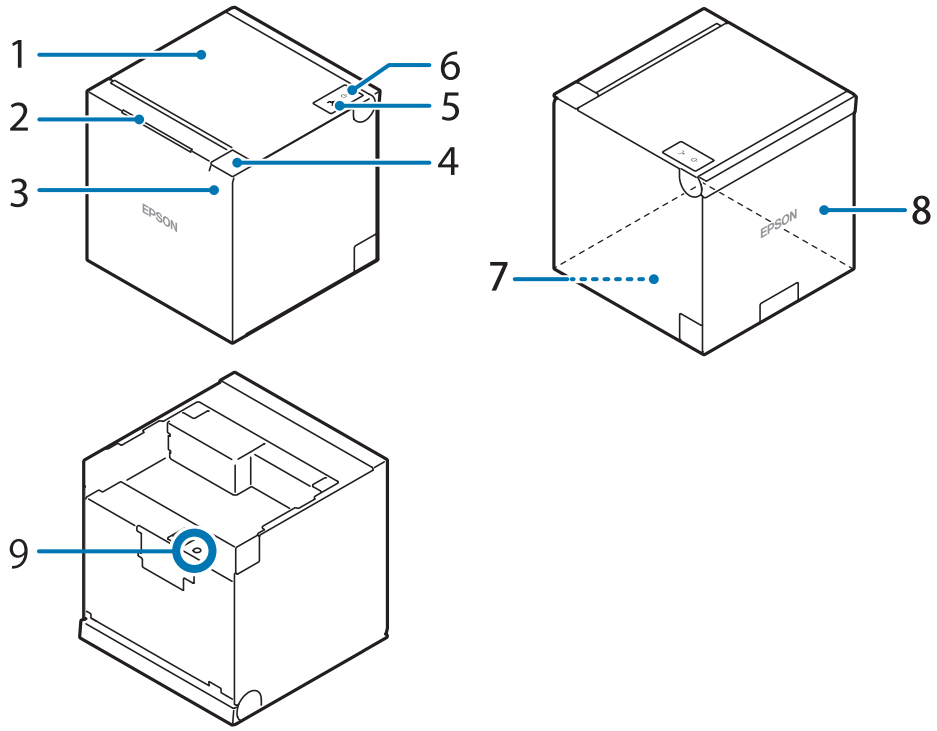

1	Roll paper cover	Open this cover when loading or replacing roll paper.
2	Panel LED	These LEDs indicate the operating status of the printer. For details on LED, see"Panel LED" on page 19.
3	NFC Tag	A mark is printed here to indicate the position of the NFC tag. Bring an NFC-compatible device close to the mark to obtain information about the printer. For the functions using the NFC tag, refer to "Useful Functions for Smart Devices" on page 30.
4	Cover open lever	Operate this lever to open the roll paper cover.
5	Feed button	Pressing this button once feeds roll paper for one line. Hold down this button to continue feeding roll paper.
6	Power button	Turns the printer on or off. The power button setting can be changed to disable the power on/off operation with the power button. See "Power Button Settings" on page 102 for details.
7	Bottom cover (With four rubber feet attached)	Remove these covers when connecting the DC cable of the AC adapter, interface cables, or USB cables of peripheral devices. Also, when you want to change the paper eject direction, remove the two covers and reattach them switching the attachment position. The printer is shipped with the covers attached so that paper is ejected upward.
8	Rear cover (There is a logo on the cover)	
9	Status sheet button	Use this button to print a status sheet on interfaces or initialize the settings on interfaces.

Panel LED

Power LED

- Lights when the power supply is on.
- Off when the power supply is off.
- Flashes during the network to start up, when waiting for power off, or updating firmware.

> **CAUTION**
> During turn-off process (while the power LED is flashing), do not perform the following operations. Otherwise, it may not startup correctly.
> - Disconnecting the DC cable from the printer or disconnecting the plug from the wall outlet
> - Turning off the circuit breaker

Error LED

- Lights or flashes when an error occurs. (For information about the flashing patterns, see "Status and Errors" on page 22.)
- Lights after the power is turned on or after a reset (offline). Automatically goes out after a while to indicate that the printer is ready.
- Off when the printer is in standard mode (online).

Paper LED

- Lights when there is not enough roll paper left, or when no roll paper is left.
- Flashes to urge user to operate the Feed button.

Ethernet LED

- Lights when a LAN cable is connected to the printer and the printer is ready for communication.
- Flashes when the printer is temporarily unable to communicate, such as when it is obtaining an IP address after the LAN cable is connected.
- Off when a LAN cable is not connected to the printer and when the printer is connected to Wi-Fi.

Wi-Fi LED

- Lights when the printer is connected to Wi-Fi and ready for communication.
- Flashes when the printer is temporarily unable to communicate, such as when it is attempting to connect to a configured network or is in the process of acquiring an IP address.
- Off while the printer is not connected to Wi-Fi or while the printer is connected to a wired LAN.

Bluetooth LED

- Lights while the printer is connected via Bluetooth.
- Flashes while the printer is waiting to be paired with another device.
- Off while the printer is not connected via Bluetooth.

Connectors

All connectors are located on the lower rear of the printer. When connecting a cable, always check the shape of the connector and the cable end and insert the cable straight in.

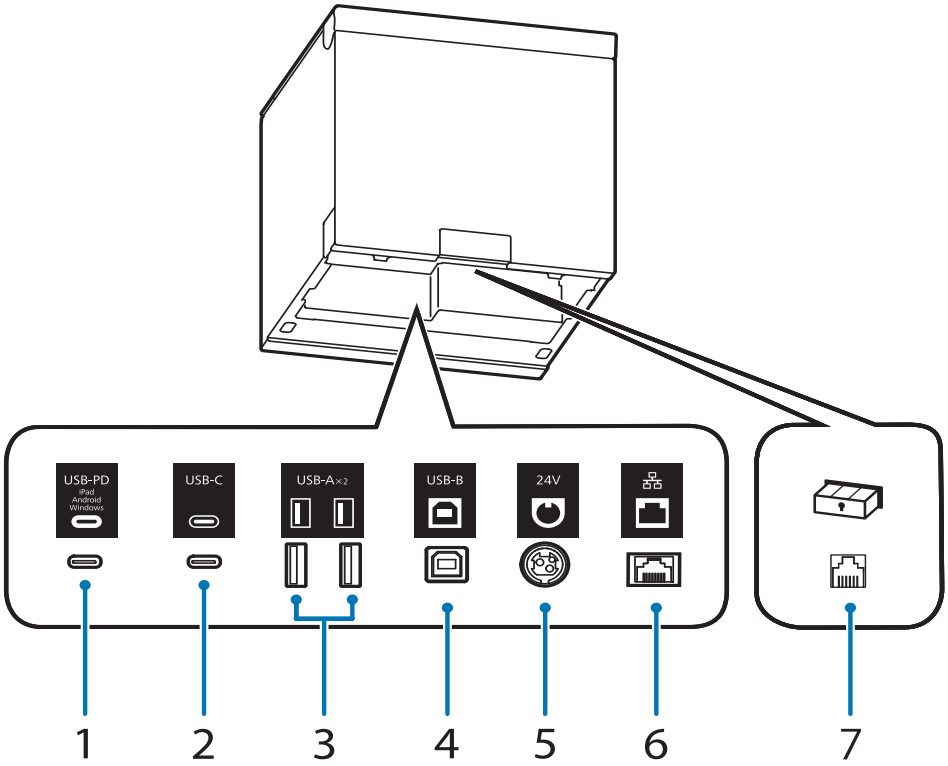

1	USB-C connector (USB-PD* compatible)	Connects a USB cable to connect to a smart device such as a tablet device. Allows data communication while charging the smart device.
2	USB-C connector	For connecting a peripheral device such as a handheld scanner. When connecting a smart device for both charging and communication, connect it to No.1 USB-C connector (USB-PD compatible).
3	USB-A connector	For connecting a peripheral device such as a wireless LAN unit, customer display, or handheld scanner.
4	USB-B connector	Connects the USB cable for connecting to a computer.
5	Power supply connector	Connects the DC cable for the AC adapter. "Connecting to the Power Source" on page 48
6	Ethernet connector	Connects the LAN cable.
7	Drawer kick connector	Connects the modular cable for the cash drawer. "Connecting the Cash Drawer" on page 46

* USB-PD stands for USB Power Delivery, the name of the standard for power supply using USB.

CAUTION

- To communicate with the printer via Bluetooth while connecting a smart device such as a tablet device to the USB-C connector (USB-PD compatible), set [USB-PD Mode] to [Source Fixed]. See "Software Settings" on page 65 for setting instructions.
- Depending on the specifications of your smart device, it may not be possible to charge the device using the USB-C connector (USB-PD compatible). In that case, use a dedicated charger (such as the charger included with your smart device).

Online and Offline

Online

The printer is online and ready for normal printing unless there is a reason to go offline.

Offline

The printer automatically goes offline under the following conditions:

- While the printer power is turning on/off
- While roll paper is fed using the Feed button
- When the printer stops printing due to a paper end (when the paper out detector detected the paper out)
- During an operation standby state
- When an error has occurred (See "Status and Errors" on page 22.)
- While the roll paper cover is open

Status and Errors

The status of the printer is indicated by lit and flashing LEDs.

CAUTION	You cannot print when an error has occurred.

NOTE	You cannot identify the error by the flashing patterns of the LEDs. Develop the application so that users can identify the error description and check the solutions.

Status Display

●: ON ☀: Flashing ○: OFF -: Ignore the LED light

Power LED	Error LED	Paper LED	Ethernet LED	Wi-Fi LED	Bluetooth LED	Printer Status
●	○	○	-	-	-	Online
●	●	●	●	●	●	While initializing after turning on the power
●	○	☀	○	○	○	Waiting for the self-test to continue
●	○	☀	-	-	-	Waiting for a Macro execution to run
●	●	☀	-	-	-	Waiting for the roll paper cover to be closed to print a status sheet.
●	●	●	-	-	-	No roll paper
●	○	●	-	-	-	Remaining amount of roll paper is low
●	●	-	-	-	-	The roll paper cover is open, or an automatically recoverable or recoverable error has occurred. See "Error Status" on page 24 for more information on the errors.
☀*1	○	-	-	-	-	A warning about TM-Intelligent function
●	☀	-	○	○	○	Unrecoverable Errors Turn off the power immediately when an unrecoverable error occurs. CAUTION: If the same error occurs again even after turning the power back on, contact qualified service personnel. See "Power Button Settings" on page 102 for information on how to turn off the power when the power button setting is “Auto”.
●	☀*2	-	-	-	-	A USB hub is connected.
●	☀*3	-	-	-	-	A device that is not compatible with the printer except for USB charging is connected.
☀	○	○	○	○	○	Updating firmware

Power LED	Error LED	Paper LED	Ethernet LED	Wi-Fi LED	Bluetooth LED	Printer Status
⏣	○	⏣	○	○	○	While forced updating firmware mode is on
⏣*4	●	○	○	○	○	During turn-off process

*1: The Power LED flashing pattern is: lighting for 4960 ms followed by a pause for 160 ms.

*2: The Error LED flashing pattern is: lighting for 160 ms followed by a pause for 2400 ms. The LED goes off after repeating the pattern for five seconds.

*3: The Error LED flashing pattern is: lighting for 320 ms followed by a pause for 320 ms. The LED goes off after repeating the pattern for five seconds.

*4: The Power LED flashing pattern is: lighting for 320 ms followed by a pause for 320 ms.

Network Connection Status

●: ON ⏣: Flashing ○: OFF

Ethernet LED	Wi-Fi LED	Printer Status
○	●	The printer is connected to Wi-Fi and ready for communication.
○	⏣	The printer is temporarily unable to communicate, such as when it is attempting to connect to a configured network or is in the process of acquiring an IP address.
●	○	A LAN cable is connected to the printer and the printer is ready for communication.
⏣	○	The printer is temporarily unable to communicate, such as when it is obtaining an IP address after the LAN cable is connected.
⏣	⏣	Starting the network firmware
○	○	Not connected to a network

The LED flashing pattern is: lighting for 320 ms followed by a pause for 320 ms.

Bluetooth Connection Status

●: ON ☀: Flashing ○: OFF

Bluetooth LED	Printer Status
●	Connecting via Bluetooth
☀	Waiting to be paired with a device
○	Not connected via Bluetooth

The LED flashing pattern is: lighting for 320 ms followed by a pause for 320 ms.

Error Status

There are three possible error types: automatically recoverable errors, recoverable errors, and unrecoverable errors.

Automatically Recoverable Errors

Error	Description	Recovery
Head temperature error	The head temperature exceeded the proper range.	The printer recovers from the error when the head temperature drops.
Cover open error in the middle of printing	The roll paper cover was opened during printing.	The printer recovers from the error when the roll paper cover is closed.
Motor driver IC high temperature error	The motor driver IC temperature exceeded the proper range.	The printer recovers from the error when the motor driver IC temperature drops.
DC motor overheat error	The DC motor temperature exceeded the proper range.	The printer recovers from the error when the DC motor temperature drops.

Recoverable Errors

Error	Description	Recovery
Autocutter error	The cutter blade is locked due to a foreign object fell inside the printer or other reason.	Remove foreign objects or paper, and then close the roll paper cover to make the printer recover from the error. The printer automatically recovers from the error if the blade can be unlocked easily, however, make sure to check for foreign objects before use.
Paper jam error	The roll paper is jammed.	Remove foreign objects or paper, and then close the roll paper cover to make the printer recover from the error.

NOTE

Instead of closing the roll paper cover, you can make the printer recover from the error using a dedicated command, however, doing so will cause the printer to go offline due to a cover open error.

Unrecoverable Errors

These include a high voltage error, CPU execution error, and communication unit error. If the error persists after turning the printer off and then on again, the printer may be defective. Contact qualified service personnel.

CAUTION	If an unrecoverable error occurs, turn off the power immediately by pressing and holding the power button until the power LED flashes or by unplugging the DC cable or power plug.

NV Memory (Non-Volatile Memory)

The printer's NV memory stores data even after the printer power is turned off. NV memory contains the following memory areas for the user:

- NV graphics memory
- User NV memory
- Memory switches (customized values)
- R/E (Receipt Enhancement)
- Maintenance counter

CAUTION	As a guide, NV memory rewriting should be used 10 times or less a day when you program applications.

NV Graphics Memory

Graphics, such as shop logos to be printed on receipts, can be registered.

To register your graphics data, use TM-m50II Utility or ESC/POS commands.
You can check registered graphics data using TM-m50II Utility or by printing the data in the NV graphics information print mode.

User NV Memory

You can store and read text data for multiple purposes, such as for storing a note including customizing or maintenance information of the printer.

Memory Switches (customized values)

With the memory switches, which are software switches for the printer, you can configure various settings of the printer. For information about the memory switch, see "Software Settings" on page 65.

R/E (Receipt Enhancement)

You can set the graphics data, such as a shop logo, registered in the NV graphics memory to be printed on the top of each receipt or to be printed on the bottom of each receipt just before the paper is cut.

To make the settings, use TM-m50II Utility or ESC/POS commands.

You can check the settings using TM-m50II Utility or by printing the settings information in the Receipt enhancement information print mode.

Maintenance Counter

With this function, printer information, such as the number of lines printed, the number of autocuts, and printer operation time after the printer starts working, is automatically stored in printer's memory. You can read the counter information to use it for periodical checks or part replacement.

NOTE

- You can also check the head running length and number of times of autocutting with the self-test (see "Self-test Mode" on page 80).
- The maintenance counter values are automatically saved in the NV memory usually every two minutes (up to four minutes). However, the values are not saved when the printer is in power-saving mode or when it is turned off without the use of the power button.

Simple Setup for Wireless LAN

The printer has "SimpleAP" mode that allows a device to directly connect to the printer without using an access point. This makes it easy to set up a printer to connect to a wireless LAN using the printer setting tool, without having to go through a network environment such as an access point.

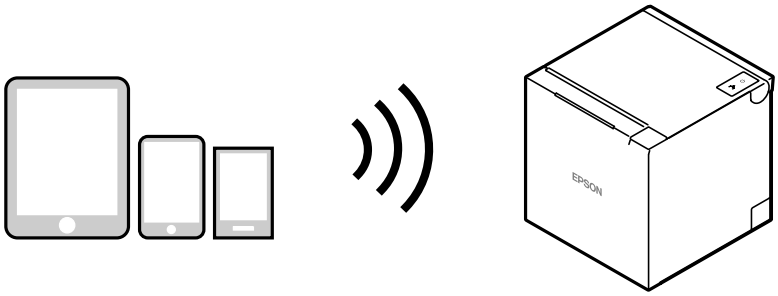

When all of the following conditions are met and the printer is turned on, SimpleAP will start automatically. After startup, a "SimpleAP Start" sheet will be printed.

- No USB cable is connected
- No LAN cable is connected
- SSID and passphrase are not set
- Never connected via Bluetooth
- The optional wireless LAN unit is connected and [Wireless Chip Mode] is set to [Option Unit], which is the setting for using the optional wireless LAN unit.

"SimpleAP Start" sheet

```
SimpleAP Start

SSID : DIRECT-TM-m50II-H-XXXXXXXXXX
IP Address : 172.16.10.1
MAC Address : XX-XX-XX-XX-XX-XX

To configure this printer's Wi-Fi
connection, please follow one of the
below methods:

1. Using your device's web browser:
  * Use your device's camera to scan
    the avobe QR code.
 :
 :
```

Even if you are using the optional wireless LAN unit, the "SimpleAP Start" sheet described above will be printed when SimpleAP automatically starts up when the printer is turned on.

If SimpleAP does not start automatically (the "SimpleAP Start" sheet is not printed), start SimpleAP from the menu that can be selected after printing the status sheet guidance ("Setup using Web Config" on page 58) or from the interface setup mode ("Interface Setup Mode" on page 84).

If you have changed the wireless LAN connection settings from the default settings for your environment and devices, start according to those settings and connect to the access point.

About SimpleAP

- Use SimpleAP to change the printer's wireless LAN connection settings.
- The printer acts as an access point in the SimpleAP mode and allows up to eight devices to connect to the printer. However, devices directly connected to the printer cannot communicate with each other through the printer.
- Do not use 172.16.x.x for the IP address of the wireless LAN and wired LAN because the default IP address of SimpleAP is 172.16.10.1. If used, SimpleAP will be stopped to avoid IP address conflicts.
  If SimpleAP is restarted in the above state, the initial IP address of SimpleAP will be changed to 192.168.223.1 to avoid IP address conflicts.
- Even if you have not changed your passphrase, you may be prompted to enter your passphrase. In that case, enter the serial number of the printer.
- If SimpleAP is started when the printer is connected via wireless LAN, the wireless LAN connection is temporarily disconnected.

About Wi-Fi Direct

- Use Wi-Fi Direct to connect the host and printer directly over a wireless LAN for printing without using an access point.
- The printer acts as an access point in the Wi-Fi Direct and allows up to eight devices to connect to the printer. However, devices directly connected to the printer cannot communicate with each other through the printer.
- The printer can be connected to Wi-Fi Direct and a wireless LAN or a wired LAN at the same time.
- Wi-Fi Direct settings can be checked or changed using Web Config or TM-m50II Utility. For details, check the Web Config Reference Guide or the TM-m50II Utility User's Manual.

Useful Functions for Smart Devices

You can easily connect this product to the network by using the NFC tag built-in to the printer or the QR code printed on the status sheet.

NFC Tag

Bring a smart device that supports NFC close to the NFC tag to acquire the printer information (information for specifying the device).

By using the acquired information, the device can specify the printer to send a print job over a network or Bluetooth.

QR Code

Capture the QR code printed on the status sheet with the camera on your smart device to acquire the printer information (information for specifying the device).

By using the acquired information, the device can specify the printer to send a print job over a network or Bluetooth.

NOTE

- Programming using Epson ePOS SDK is required to use these functions. These functions are created by combining NFC touch and QR code capturing operations and the target printer specifications using Printer Easy Select API.
  See the "Epson ePOS SDK for Android/iOS User's Manual" and the Epson ePOS SDK sample program for more details. The sample program also contains a sample implementation method for reading an NFC tag and capturing a QR code.
- You can try a demo of these functions by using Epson TM Utility.

Printing Using Multiple Interfaces

The printer offers multiple interfaces and allows you to use all of them without limitation. You can use this function to temporarily connect a smart device to a nearby printer and print.

The printer provides each interface with an independent receive buffer and switches the active interface depending on the priority, while handling data in each receive buffer.

You can set one interface for the main connection. Data received from the main connection interface is handled with the highest priority.
By default, the interface that receives the first data transfer is set as the main connection interface; however, you can select the main connection interface in advance.

When the receive buffer for the active interface becomes empty and a preset time period has passed, switching to another interface is enabled, and an interface that receives print data becomes active.

CAUTION

- You cannot use wired and wireless LANs at the same time. When a LAN cable is connected, wireless LAN is disabled.
- When you do not use the Bluetooth function, set the Bluetooth security level to "Middle" or "High" to prevent unauthorized access to the printer over Bluetooth. You can change the security level by using Epson TM Utility, TM-m50II Utility, or in the Interface Setup mode.

NOTE

You can select the main connection interface and set the time to enable interface switching from the software settings. For details on software settings, see "Software Settings" on page 65.

USB-PD and Network Tethering

USB-PD Function

USB-PD stands for USB Power Delivery, the name of the standard for power supply using USB. The USB-C connector (USB-PD compatible) of this product can supply up to 18 W.

How to Use the USB-PD Function

By connecting your USB-PD compatible smart device to the USB-C connector (USB-PD compatible) of the printer, you can use the smart device while charging it.

The printer is also equipped with a USB-C connector that does not support USB-PD for connecting a peripheral device. When using the USB-PD function, be sure to connect the smart device to the USB-C connector (USB-PD compatible).

The USB-C connector (USB-PD compatible) of the printer has the following operation modes. Change the operation mode if necessary according to your smart device.

Setting	Explanation
Normal (initial setting)	Allows power supply to and communication with a smart device connected to the USB-C connector (USB-PD compatible).
Source Fixed mode	Allows only power supply to a smart device connected to the USB-C connector (USB-PD compatible). Therefore, the network tethering functionality cannot be used. Select this mode if you want to supply power to an iOS device while connecting to it via Bluetooth.
Sink Fixed mode	Allows only communication with a smart device connected to the USB-C connector (USB-PD compatible). Therefore, the device cannot be charged. Select this mode when communicating with Android or Windows devices that do not support USB-PD.

The operation mode setting can be changed using Epson TM Utility (for iOS/Android), TM-m50II Utility (for Windows), or in the software setting mode of the printer.

When using Epson TM Utility

Change the setting in [Change Printer Settings] - [USB-PD Mode].

When using TM-m50II Utility

Change the setting in [Advanced] - [Interface] - [USB-PD Mode]. See the TM-m50II Utility User's Manual for details.

When using the Software Setting Mode of the Printer

Change the setting in [3. Customize Value Settings] - [10. Interface Settings] - [13. USB-PD Mode].
See "Software Settings" on page 65 for more details.

Network Tethering

A tablet POS system is a POS system that uses a smart device such as a tablet computer in which the POS application is installed. If the smart device communicates via Wi-Fi, the communication may become unstable depending on the radio wave condition in the shop or store and it may cause the POS system to malfunction.

The network tethering provides network function to a smart device that is connected to the printer using a USB cable. This enables stable and reliable operation of the POS system.

CAUTION

- If the network tethering is enabled and a smart device is connected to the USB-C connector (USB-PD compatible) on the printer that is connected to a wired network, the smart device can communicate over the wired network using the tethering function instead of Wi-Fi communication.
- Wired connections using network tethering will have a transmission speed of 20 Mbps or higher, but may be lower than 20 Mbps depending on the capabilities of the host device and the network environment.

For Wi-Fi Communication

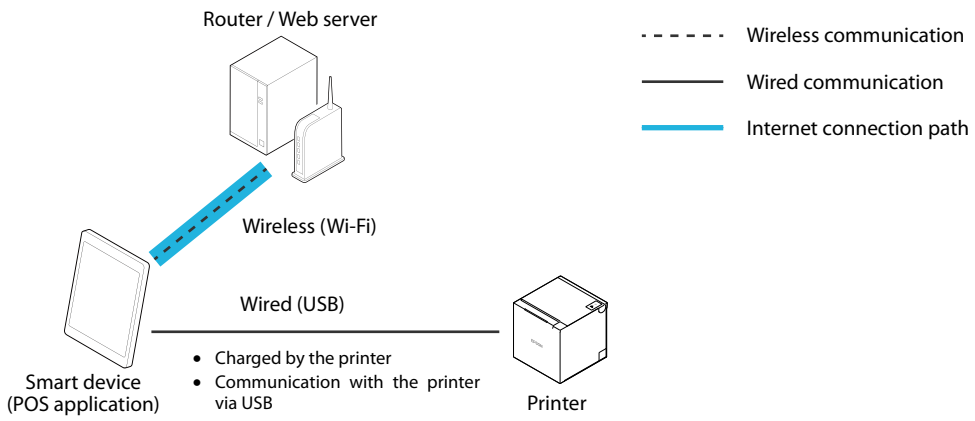

For Wired LAN Communication (Using the Network tethering)

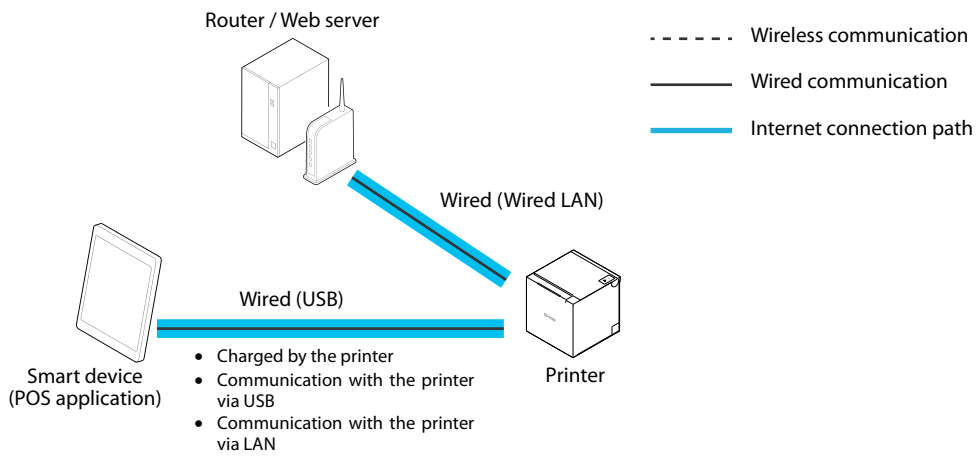

How to Use the Network Tethering Function

The network tethering function can be used by selecting the OS of the smart device to be used in the printer's network tethering settings and connecting a smart device that supports network tethering to the USB-C connector (USB-PD compatible) on the printer.

How to Change the Network Tethering Settings

The network tethering settings can be changed using Epson TM Utility (for iOS/Android), TM-m50II Utility (for Windows), or in the software setting mode of the printer.

When using Epson TM Utility

Change the settings in [Change Printer Settings] - [Network Tethering].

When using TM-m50II Utility

Change the setting in [Advanced] - [Interface] - [Network Tethering]. See the TM-m50II Utility User's Manual for details.

When using the Software Setting Mode of the Printer

Change the setting in [3. Customize Value Settings] - [10. Interface Settings] - [12. Network Tethering].
See "Software Settings" on page 65 for more details.

CAUTION	When changing the network tethering settings, do not connect a cable to the USB-C connector (USB-PD compatible).

How to Connect using Network Tethering

Follow the steps below to connect your smart device via network tethering.

1 **Connect the printer to a wired network.**

2 **Turn on the printer and wait until the Ethernet LED changes from flashing to lit.**

3 **Disable Wi-Fi on your smart device from the Wi-Fi settings menu.**
The following screenshots are examples on an iOS device.

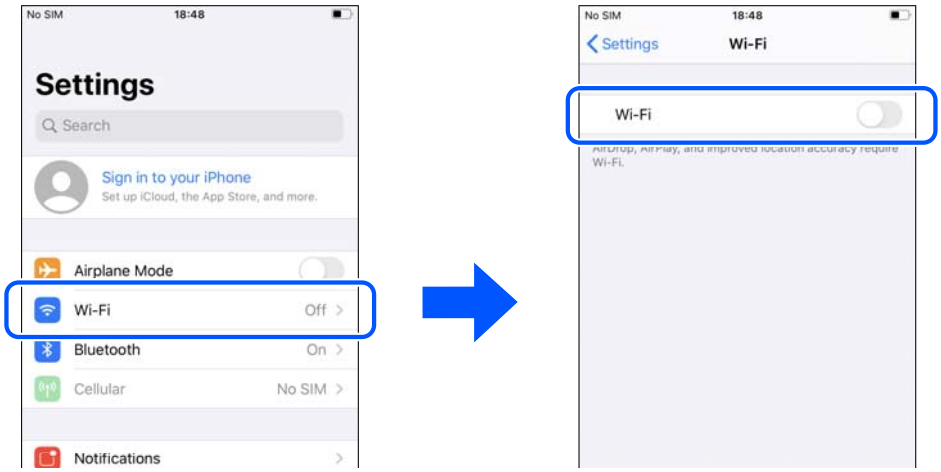

4 Connect the smart device to the USB-C connector (USB-PD compatible).

Connect using the smart device's genuine cable or a USB certified cable. When using a Lightning cable, use an MFi certified cable.

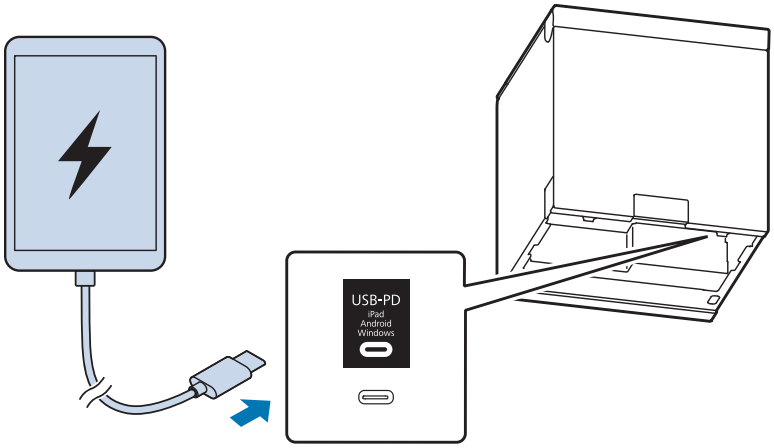

NOTE

- It may take a few seconds for the smart device to start charging as it sets the optimal current value. Charging may also be stopped once immediately after connection.
- If a device exceeding the rated current is connected to the USB-C connector (USB-PD compatible), charging to the device will stop. ("Product Specifications" on page 121)
- Depending on how the smart device is used, it may not be fully charged. (For example, when the screen brightness is at maximum, or when the sleep function (turning off the screen) is disabled.)
- To communicate with the printer via Bluetooth while connecting a smart device such as a tablet device to the USB-C connector (USB-PD compatible), set [USB-PD Mode] to [Source Fixed]. See "Software Settings" on page 65 for setting instructions.
  Also, charging may not be possible depending on the connected smart device, so make sure to thoroughly check and evaluate the device before use.
- To use the tethering function of the printer, you need to configure the settings according to the OS of your smart device. See "How to Change the Network Tethering Settings" on page 34 for more details.
- If the printer is connected to a wired network, a smart device connected via USB will be able to communicate over the network via USB. See "How to Change the Network Tethering Settings" on page 34 for more details.

5 Verify that the IP address is set in the network settings menu of your smart device.

The following screenshots are examples on an iOS device.

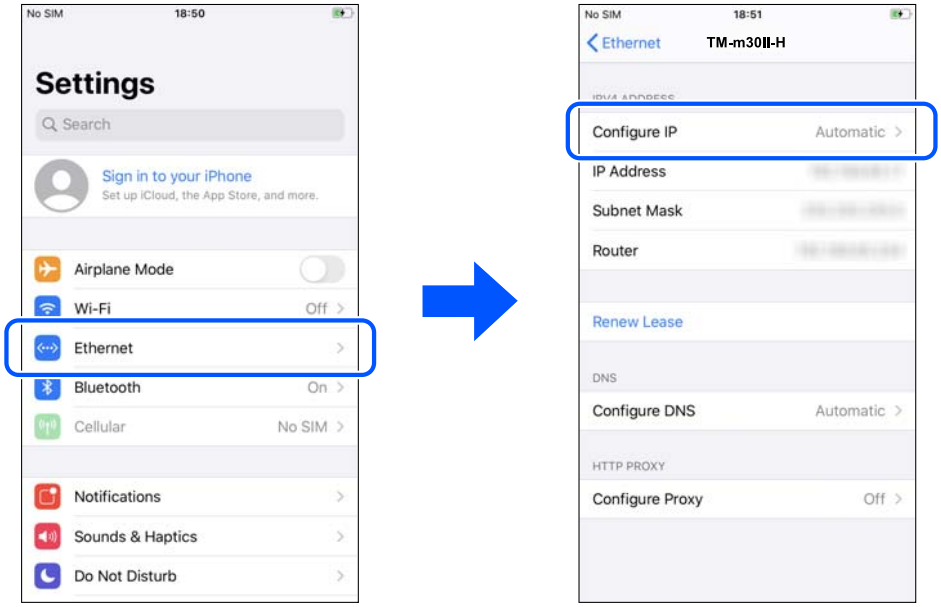

NOTE

- If you do not see [Ethernet] in [Settings] on your iOS device, the network tethering function of the printer may be disabled. See "How to Change the Network Tethering Settings" on page 34 to enable the tethering.
- If a DHCP server is not used in the network, set the IP address and subnet mask manually.
- To print from the smart device, select one of the interfaces; USB or network, in the application.

Available Smart Devices and Notes

Supported OS Versions

The following operating systems are supported by the USB-PD and network tethering functions of the printer.

OS	Version
iOS	12 or later
Android	11 or later
Windows	Windows 10 or later

Supported Smart Devices

The following smart devices have been confirmed by us to work with the USB-PD function and network tethering function.

Manufacturer and Product Name	OS version	USB-PD Function		Network Tethering	
		Support	Operation mode	Support	Settings Top: USB-PD operation mode Bottom: Network tethering
Apple iPad 8th generation	iOS14.6	Yes	Normal	Yes	Normal iOS
Apple iPad 7th generation	iOS15.3	Yes	Normal	Yes	Normal iOS
Apple iPad Air 4th generation	iOS15	Yes	Normal	Yes	Normal iOS
Apple iPad Air 3rd generation	iOS13.1	Yes	Normal	Yes	Normal iOS
Apple 12.9" iPad Pro 5th generation	iOS15.0.2	Yes	Normal	Yes	Normal iOS
Apple 12.9" iPad Pro 4th generation	iOS15.1	Yes	Normal	Yes	Normal iOS
Apple 11" iPad Pro 3rd generation	iOS15.0.2	Yes	Normal	Yes	Normal iOS
Apple 11" iPad Pro 2nd generation	iOS13.5	Yes	Normal	Yes	Normal iOS
Samsung Galaxy Tab S7	Android 11	Yes	Normal	Yes	Normal Android
Google Pixel 5	Android 11	Yes	Normal	Yes	Normal Android
Google Pixel 6 Pro	Android 12	Yes	Normal	Yes	Normal Android
EPSON Endeavor TN40	Windows10	No Communication	Normal	Yes	Normal Windows
EPSON Endeavor TN40 (without internal battery)	Windows10	No Communication	Normal	Yes	Normal Windows

Support and Usage Precautions

When using the USB-PD function and network tethering function, confirm the following precautions and make sure to fully check and evaluate the operation before use.

- Communication may not be possible even if the smart device is USB-PD compatible.
- Use the genuine cable of the smart device or a USB certified cable to connect the printer to the smart device. Also, when using a Lightning cable, use an MFi certified cable.
- Charging may not be possible depending on the charging specifications of the smart device.
- Bluetooth communication cannot be used when an iOS device is connected to the printer via the USB-C connector (USB-PD compatible) and the USB-PD mode is set to [Normal]. In this case, set the USB-PD mode to [Source Fixed].

USB-PD Mode: Normal

USB connection	USB communication with an iOS device	Bluetooth communication with an iOS device
Connected	Possible	Not possible
Not connected	Not possible	Possible

USB-PD Mode: Source Fixed

USB connection	USB communication with an iOS device	Bluetooth communication with an iOS device
Connected	Not possible	Possible
Not connected	Not possible	Possible

- After turning on the printer, wait until the initialization process is complete (about 40 seconds) before printing or making settings via the USB-C connector (USB-PD compatible).
- We are not liable for any pure economic loss caused by failure to charge your smart device due to failure, error, or malfunction of the printer.

Roll Paper Near-End Detection Function

This function allows the printer to detect that the roll paper is running low.

The amount of roll paper remaining (outside diameter) when near-end detection occurs is shown below.

When ejecting paper upward	When ejecting paper frontward
Approximately 24 mm	

CAUTION

Accurate detection of the roll paper near-end status is impossible because the shape of the core varies from one roll paper to another.

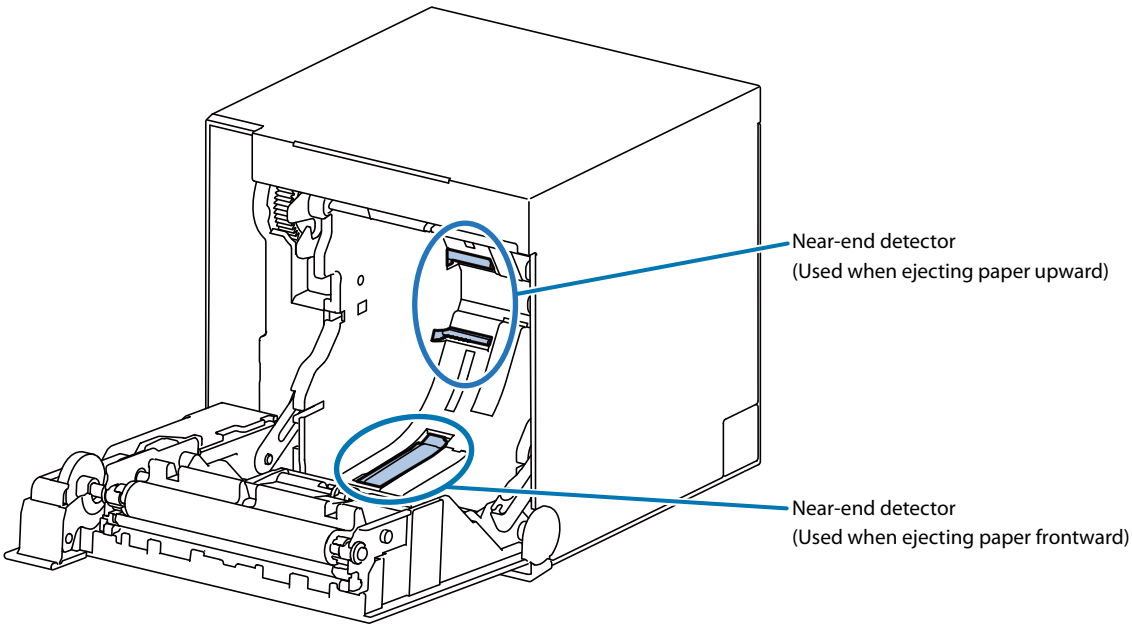

NOTE

Some printer models are not equipped with the roll paper near-end detector.

Setup

This chapter describes setup and installation of the product and peripherals.

Flow of Setup

This chapter consists of the following sections along with the setup flow of the product and peripherals.

1. Installing the Printer (page 41)
2. Changing the Paper Width (page 42)
3. Connecting the Optional Wireless LAN Unit (page 43)
4. Connecting the Optional Customer Display (page 44)
5. Connecting the Optional External Buzzer (page 45)
6. Connecting the Cash Drawer (page 46)
7. Connecting to the Power Source (page 48)
8. Connecting the Printer to the Host Devices (page 50)
9. Routing Cables in Various Directions (page 62)

Installing the Printer

You can select whether to eject printed paper from the top side or from the front side.

The paper ejection direction can be changed by switching the attachment position of the printer covers.

The printer is shipped with the covers attached so that paper is ejected upward (from the top side). When you want to eject printed paper frontward (from the front side), see the following pages to switch the attachment position of the covers.

- Removal procedure: "When Ejecting Paper Upward" on page 108
- Attachment procedure: "For Ejecting Paper Frontward" on page 111

Ejecting Paper Upward	Ejecting Paper Frontward
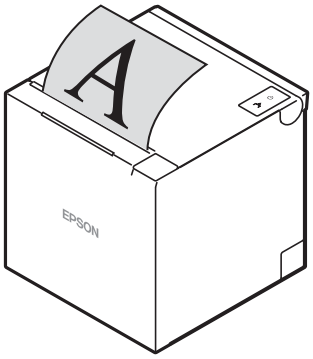	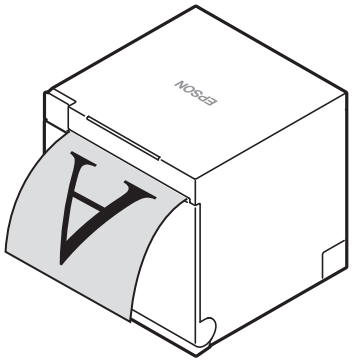

CAUTION

- Place the printer on a flat surface.
- Take measures to prevent the printer from moving due to vibrations when using the cash drawer.
- Do not place the printer in locations subject to high dust levels.
- Do not give a high impact on the printer during operation. Doing so may cause the print failure.
- Be careful not to place cords or foreign substances under the printer.

NOTE

- You can install the printer as a wall hanging printer if you use the optional Wall Hanging Bracket Set (OT-WH30). Refer to the installation manual of the Wall Hanging Bracket Set for details.
- When you have set the printer to eject printed paper from the front side, you can flip printed pages upside down by enabling the "Batch rotate print (Upside Down)" function. For more details, see "Software Settings" on page 65.

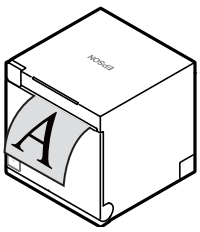

Changing the Paper Width

You can change the paper width from 80 to 58 mm by installing the included 58 mm width roll paper guides. Follow the steps below to change the paper width.

CAUTION	Once you change the paper width to 58 mm and print on 58 mm width roll paper, you cannot go back to 80 mm width. Because parts of the print head that do not normally touch the paper may be damaged by the platen roller, and the autocutter may wear out.

1 **Make sure the printer is turned off.**

2 **Open the roll paper cover.**

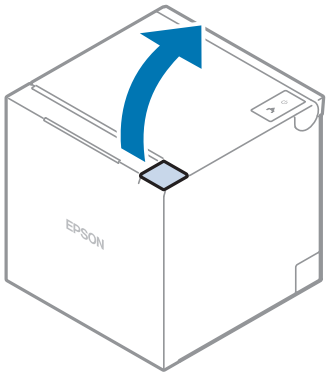

3 **Install the roll paper guides aligning the triangle marks as shown below.**

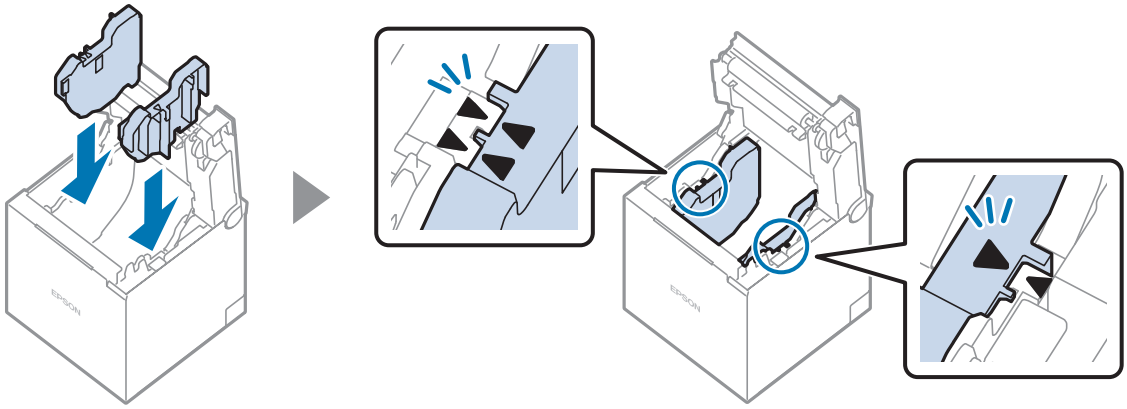

4 **Set the paper width in software setting mode.**

For information about the software setting mode, see "Software Settings" on page 65.

Connecting the Optional Wireless LAN Unit

This product has Wi-Fi capability, but an optional wireless LAN unit can also be used.

When you use the wireless LAN unit, you need to change the [Wireless Chip Mode] setting to [Option Unit] before connecting the unit. The setting can be changed using Epson TM Utility, TM-m50II Utility, or in the software setting mode. See "Software Settings" on page 65 for more details.

CAUTION

- Depending on the installation conditions of the printer and the routing for cables connected to it, the status of the radio waves for the Wireless LAN unit may decline. If this does happen, use an extension cable.
- If "Option Unit" is selected for [Wireless Chip Mode], the Bluetooth function of this product cannot be used.

1 **Make sure the printer is turned off.**

2 **Connect the optional wireless LAN unit to the USB-A connector on the printer.**

For details on how to connect the unit, refer to the user's manual of the wireless LAN unit.

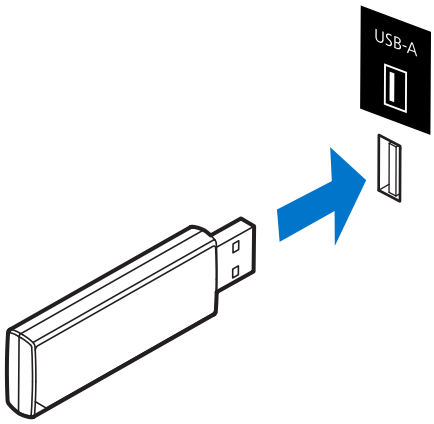

Connecting the Optional Customer Display

You can connect the customer display (DM-D30/DM-D70) to this product, using USB connection.
For more information, refer to the user's manual for the customer display.

1 **Make sure the printer is turned off.**

2 **Connect the USB cable from the customer display to the USB-A connector on the printer.**

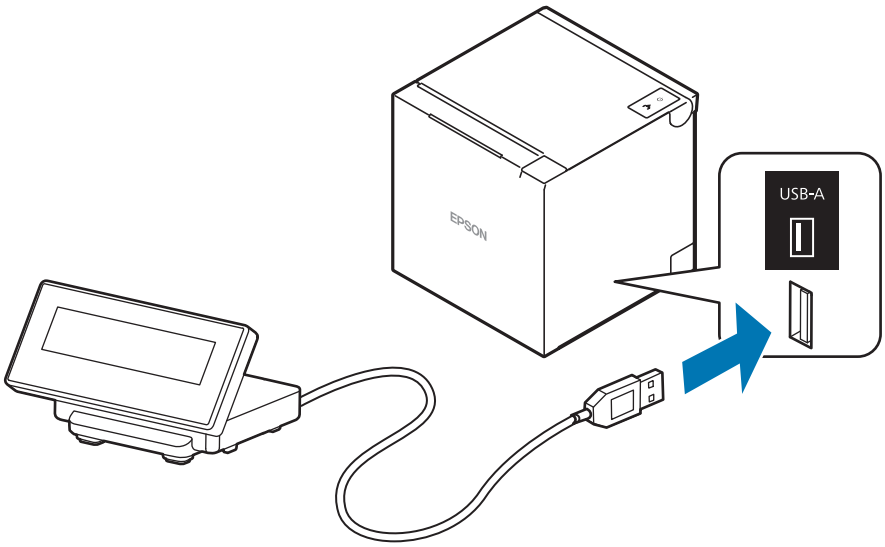

NOTE	If you want to use both the customer display (DM-D30) and the wireless LAN unit, you can connect the wireless LAN unit to the customer display. For more details, refer to the user's manual of the customer display.

Connecting the Optional External Buzzer

When the optional external buzzer (model: OT-BZ20) is connected to the drawer kick connector of the printer, you can set the printer so that it beeps when you send commands, when an error occurs, when executed autocutting, and when detected paper end. Settings for sound patterns and frequency depending on the occasions the buzzer beeps are also available.

To enable/disable the buzzer and to set the buzzer sound pattern, frequency, etc., refer to "Software Settings" on page 65.

CAUTION

- Be sure to turn off the printer before you connect/disconnect the optional external buzzer.
- Do not connect both the optional external buzzer and the cash drawer to the printer at the same time by using a branched connector.

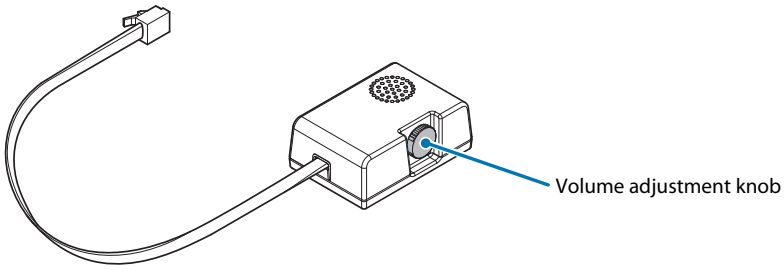

Attachment Position

The optional external buzzer is recommended to be installed in the following positions.

- When ejecting paper upward: Right side viewed from the front
- When ejecting paper frontward: Left side viewed from the front, or the top

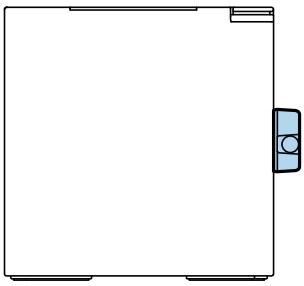

When ejecting paper upward
(Viewed from the front)

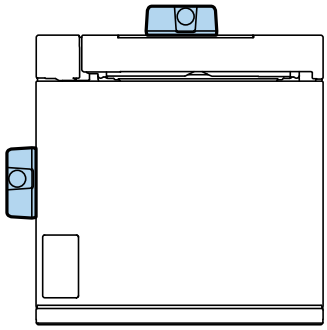

When ejecting paper frontward
(Viewed from the front)

CAUTION

- Do not install the optional external buzzer at the roll paper exit.
- If you are using the Wi-Fi + Bluetooth model, do not install the buzzer on the left side viewed from the front when ejecting paper upward or on the right side viewed from the front when ejecting paper frontward. Doing so may interfere with Wi-Fi communication. If you are using the Standard model, the buzzer can be installed on either side.
- To prevent liquid from entering inside, it is recommended to install the optional external buzzer so that the volume adjustment knob is positioned sideways or downward.

Connecting the Cash Drawer

CAUTION

- Do not connect both the optional external buzzer and the cash drawer to the printer at the same time by using a branched connector.
- When the optional external buzzer is enabled with the memory switch (customized values) (see "Software Settings" on page 65), a cash drawer cannot be used. Be sure to disable it when you use a cash drawer.
- Two driver transistors cannot be energized simultaneously.
- Leave intervals longer than 4 times the drawer driving pulse when sending it continuously.

Required specifications of cash drawers

Specifications of drawers differ depending on makers or models. When you use a drawer other than specified, make sure its specification meets the following conditions.

Otherwise, devices may be damaged.

- The load, such as a drawer kick solenoid, must be connected between pins 4 and 2 or pins 4 and 5 of the drawer kick connector.
- When the drawer open/close signal is used, a switch must be provided between drawer kick connector pins 3 and 6.
- The resistance of the load, such as a drawer kick solenoid, must be 24 Ω or more or the input current must be 1A or less.
- Be sure to use the 24V power output on drawer kick connector pin 4 for driving the equipment.

Drawer Connection Diagram

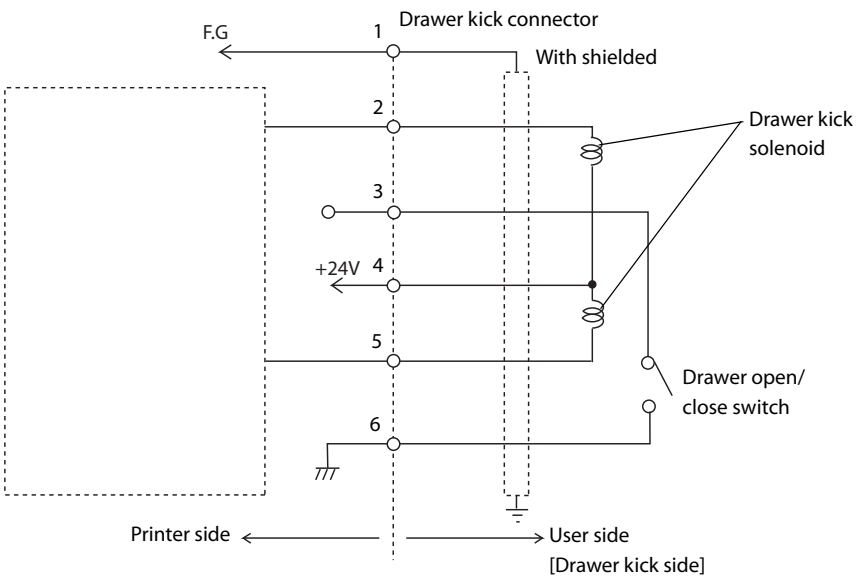

Adaptable Connector

RJ12 modular connector

Pin assignments

Pin number	Signal name	Direction
1	Frame GND	-
2	Drawer kick drive signal 1	Output
3	Drawer kick open/close signal	Input
4	+24 V	-
5	Drawer kick drive signal 2	Output
6	Signal GND	-

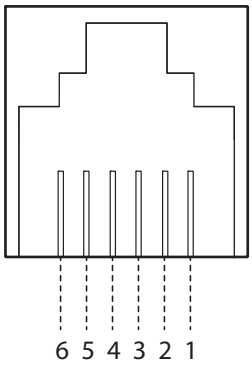

Connecting the drawer kick cable

WARNING

- **Use a shield cable for the drawer kick cable.**
- **When using cash drawer, make sure to use the power supply for printer (connector pins 4).**
- **Do not insert a telephone line into the drawer kick connector.**
  Doing so may damage the telephone line or printer.

Connect the drawer kick cable to the drawer kick connector by pressing firmly until the connector clicks into place.

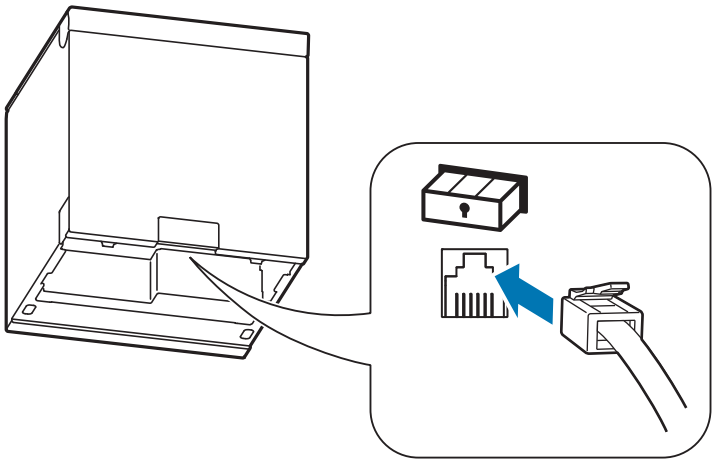

Connecting to the Power Source

WARNING

- **Never insert the AC cable plug into a socket that does not meet the input voltage of the AC adapter.**
  Doing so may result in damage to the printer.
- **Should a fault ever occur, immediately turn off the power to the printer and unplug the AC cable from the socket.**

CAUTION

When disconnecting the DC cable of the AC adapter from the printer, make sure that the AC cable is not connected, and then hold the arrow-printed portion of the connector to pull it straight out.

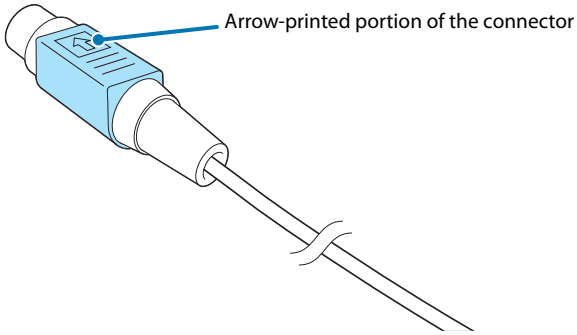

Connection Procedure

1 **Make sure the printer is turned off.**

2 **Connect the AC cable to the AC adapter.**

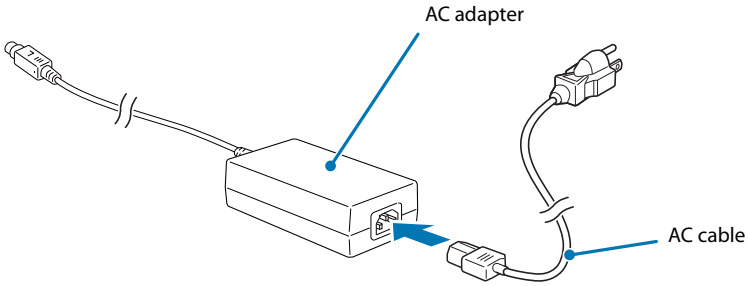

3 **Connect the DC cable of the AC adapter to the power supply connector.**

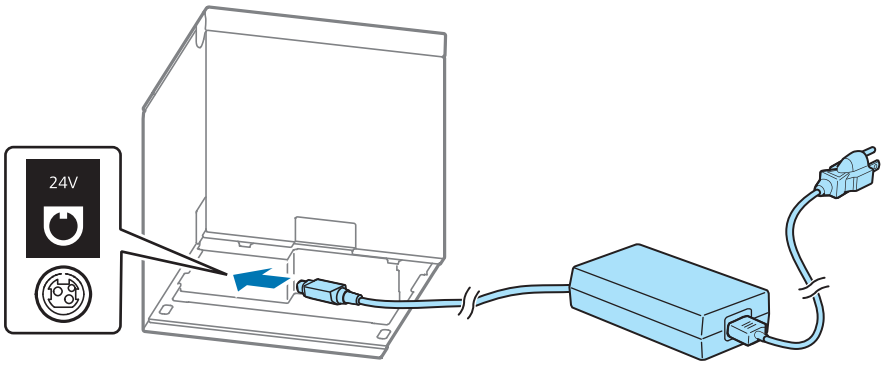

4 **Insert the AC plug into a socket.**

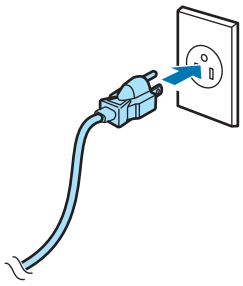

5 **Turn on the printer.**

Connecting the Printer to the Host Devices

CAUTION	When connecting cables, check the shape of the connector of the cable and the shape of the connector on the printer before connecting them. Forcing a connector in the wrong orientation or with the wrong shape may cause malfunction or damage to the printer.

USB-B Interface

When using USB cable to connect with host device, connect the USB cable to the printer, and after starting the host device, turn the printer on.

CAUTION	• Do not place any weight or stress on the cable when using. Doing so could damage the cable and connectors. • Use a USB cable that complies with the USB 2.0 standard. Using a non-compliant cable may cause the printer to malfunction due to static electricity.

USB-PD Interface

If your smart device supports USB-PD and network tethering functions, you can connect it via this interface with a USB cable to communicate with the smart device while charging it.

See "USB-PD and Network Tethering" on page 32 for details on features, setup, and connection procedures.

Ethernet Interface

Use a LAN cable to connect the printer to the network via a hub.

Configure the network settings using the network setting tool (Web Config).

Setting up using Web Config

Open the web application installed in the printer from a web browser to configure the settings.

Since you need to enter the IP address of the printer to open the web application, set the network segment of your computer to the same as the printer.

For more details about Web Config, see "Web Config" on page 94.

Setup Process

1. Print the status sheet (check the current settings)
2. Change the network settings of the computer (set its network segment to the same as the printer)
3. Configure the settings using Web Config

Setup Procedure

Follow the steps below to set up the printer.

> **CAUTION**
> When shipped from the factory, the setting for obtaining an IP address is set to "Auto", so if there is a DHCP server, the printer waits for an IP address to be assigned. If there is no DHCP server, a fixed IP address (192.168.192.168) is set. In either case, the determined IP address will be printed automatically.

1 Connect the computer and the printer to the same network.

2 Print the status sheet and check the current settings.

For instructions on how to print the status sheet, see "Printing a Status Sheet" on page 90.

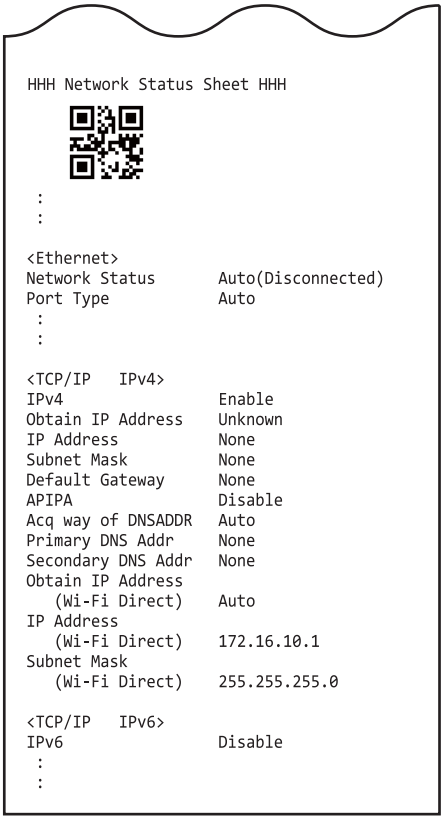

```
HHH Network Status Sheet HHH

 :
 :

<Ethernet>
Network Status        Auto(Disconnected)
Port Type             Auto
 :
 :

<TCP/IP   IPv4>
IPv4                  Enable
Obtain IP Address     Unknown
IP Address            None
Subnet Mask           None
Default Gateway       None
APIPA                 Disable
Acq way of DNSADDR    Auto
Primary DNS Addr      None
Secondary DNS Addr    None
Obtain IP Address
   (Wi-Fi Direct)     Auto
IP Address
   (Wi-Fi Direct)     172.16.10.1
Subnet Mask
   (Wi-Fi Direct)     255.255.255.0

<TCP/IP   IPv6>
IPv6                  Disable
 :
 :
```

3 Change the network settings of the computer so that the network segment is the same as the IP address of the printer you checked in step 2.

Subnet mask: Same subnet mask as the printer

IP address: Same segment as the printer (same network address), different host address

Example

	Printer	Computer
Subnet mask	255.255.255.0	255.255.255.0
IP address	192.168.192.168	192.168.192.2

4 **Start your web browser and enter the IP address of the printer in the address field.**

Example: http://192.168.192.168

NOTE	At the time of initial setting, when accessing Web Config from a browser, an authentication warning message may be displayed.

5 **Select "Advanced Settings" to log in to Web Config.**

The default password is the serial number of the printer. You can find the serial number by running the self-test or on the nameplate attached to the printer.

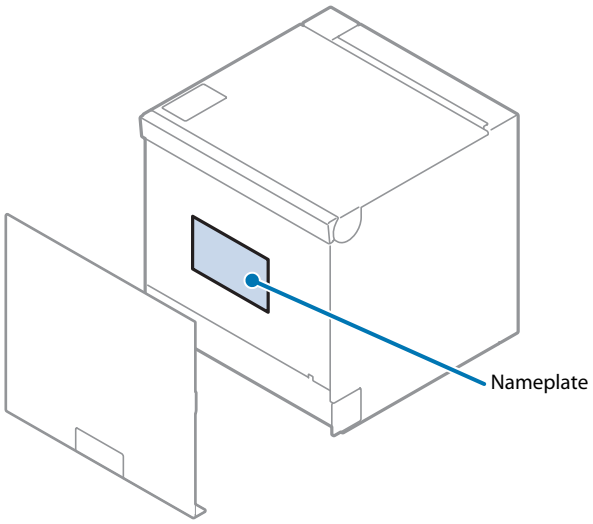

To improve security, it is recommended to change the administrator password from the default password.

The password can be changed from [Advanced Settings] - [Product Security] - [Administrator Password] in Web Config.

6 **Select the Network tab, and change the settings based on information obtained from your network administrator.**

7 **Click [Refresh] to send the changes to the printer.**

NOTE	Depending on the items you have changed, such as an IP address, the connection to the computer will be disconnected and the Web Config screen will not be displayed. To reconnect from the computer, change its network settings so that the network segment is the same as the printer.

Bluetooth Interface

Pair the printer with your device using the Bluetooth function of the device or using other methods.

Pairing the printer is also possible by using EPSON TM Bluetooth Connector (Windows) or Epson TM Utility (iOS or Android).

CAUTION

- If [Wireless Chip Mode] is set to [Option Unit], for example, when using an optional wireless LAN unit, the Bluetooth function of this product cannot be used.
- If the host computer and the printer are not connected on a continuous basis but rather connected every time the printer starts printing, some time may be needed for the printer to actually start printing after the host computer commands printing. This pause is the time required for processing the connection between the host computer and the printer, and it depends on the conditions of the environment where used.
- If data transfer from an application of the host computer has already been completed, data might remain in the Bluetooth module internal buffer. Since data remaining in the buffer may be discarded when the connection is disconnected, when disconnecting the wireless connection immediately after printing, use status or other means to confirm that the transmitted data has been printed reliably.

NOTE

- For detailed information about EPSON TM Bluetooth Connector, see the TM Bluetooth Connector User's Manual.
- The device name is editable with the TM-m50II Utility or Epson TM Utility.
- The Bluetooth security level has been set to "Middle" by default. For information on the Bluetooth security settings, see "Interface Setup Mode" on page 84.
- For details on the Bluetooth interface, see "Bluetooth Interface" on page 139.
- The pairing information of up to 8 devices can be registered. (Multi-pairing is supported.)
  If the maximum number is exceeded, the oldest pairing information will be discarded.
- Only one device can be connected at a time. (Multi-point connection is not supported.)

Setting up from a Smart Device

How to connect a smart device to a printer via Bluetooth is also introduced in the video manual.

Please see the video manual at the following URL.

☞ https://support.epson.net/p_doc/9a6/

Necessary Items

Prepare the following items.

- Smart device for setting: iOS or Android device
- Printer

Setup Procedure

1 **On your smart device, open the Bluetooth settings from Settings.**

2 **Turn on Bluetooth on the smart device.**

3 **Open the roll paper cover of the printer, and then hold down the Feed button until the paper LED starts flashing, then release the button.**

4 **Close the roll paper cover.**
A guidance that starts with "Next Action" will be printed.

5 **Briefly press the Feed button (less than one second), and then hold down the button for at least one second.**
A status sheet will be printed and the printer will be ready for pairing.

6 **Select the same device name printed on the status sheet from the list of connectable devices on the smart device and pair it.**

7 **When you see that the printer is connected, the connection is complete.**

NOTE

- The default setting of the Device Name printed on the status sheet is TM-m50II-H_xxxxxx. “xxxxxx" is the last six digits of the printer serial number.
- You can make a test print by using Epson TM Utility. For more details about Epson TM Utility, see "Utilities" on page 100.

Setting up from a Windows Computer

Follow the procedure below and make the settings.

1 **Have a Bluetooth wireless technology compatible computer ready.**
Make sure you have installed TM Bluetooth Connector.

2 **Turn on the printer.**

3 **Open the roll paper cover of the printer, and then hold down the Feed button until the paper LED starts flashing, then release the button.**

4 **Close the roll paper cover.**
A guidance that starts with "Next Action" will be printed.

5 **Briefly press the Feed button (less than one second), and then hold down the button for at least one second.**
A status sheet will be printed and the printer will be ready for pairing.

6 **Start TM Bluetooth Connector.**

7 **Select [Search all printers around this computer], and then click [Search].**

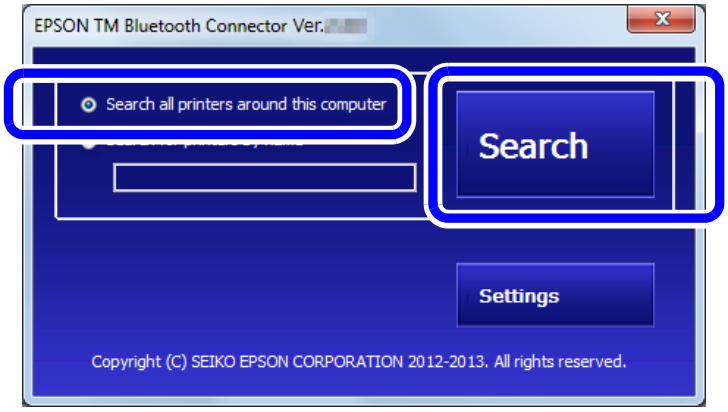

NOTE	If the printer is not found after the Search button is clicked, check the manufacture of the Bluetooth software in the computer. Open the Bluetooth settings screen from the OS settings and look for "Microsoft Bluetooth Enumerator" on the Hardware tab. If it is not found, the Bluetooth software may not be able to find the Epson Bluetooth printer and you may not be able to connect the printer to the computer.

8 **Select the printer to be paired, and then click [Connect].**

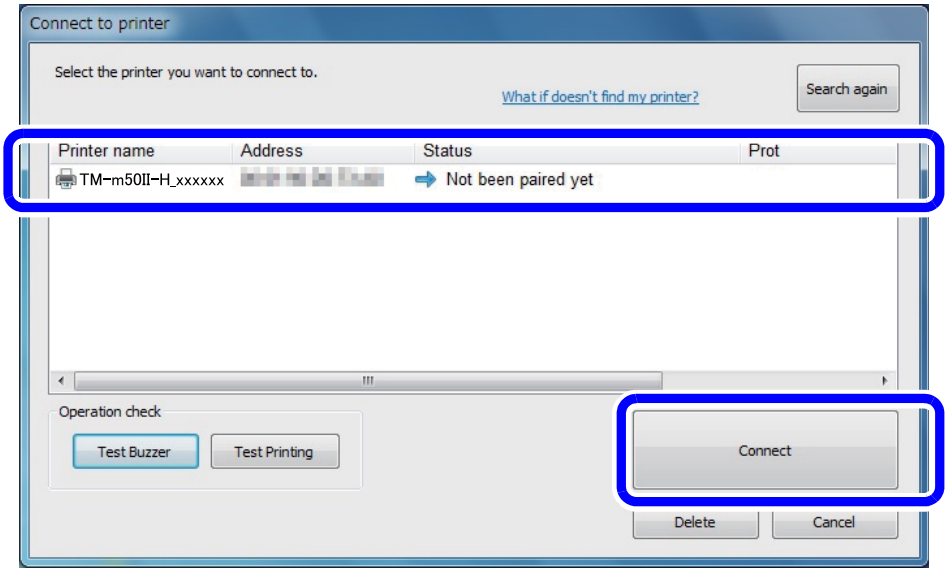

9 **Select the port to be used from the pull-down list, and then click [OK].**

10 **The "Connection complete" window appears. Click [Test Buzzer] or [Test Printing] to check operation.**

11 **Click [Back to Main screen] to return to the main window.**

12 **Click the "x" button of TM Bluetooth Connector to exit.**

NOTE

- If "Error" is displayed when you click the [Search] on the TM Bluetooth Connector, check whether:
  * The Bluetooth adapter is installed to the computer.
  * Bluetooth is ON in the Windows settings.
- If the device is not displayed on the TM Bluetooth Connector or the TM Bluetooth Connector Status shows " " after pairing.
  Check whether:
  * The printer is not turned on.
    Turn on the printer.
  * The printer is 10 m or further away from the computer.
  * Confirm that there is no other wireless device, such as a microwave oven and cordless telephone, that can interfere with the Bluetooth printer.
  * If the printer and the computer are placed in different rooms separated by a wall, move the printer and/or the computer in the same room.
  * The printer may not be detected when the search time is short. Try search again with longer search time.
  * While a computer and printer are communicating, the printer cannot be detected by other computers. Confirm that the printer to be detected is not communicating with any computer.

Wireless LAN Interface

There are the following two methods to configure the wireless LAN settings.

If you are using a Windows device, use Method 1.

If you are using an iOS or Android device, you can use either Method 1 or Method 2.

Method1: Setup using Web Config

Connect the device and printer via SimpleAP and configure the wireless LAN settings using Web Config, a network configuration tool.

Web Config is a printer built-in web page that allows you to check and change printer settings in a browser. The printer can be easily set up from a smart device such as a tablet/smart phone or a computer.

"Setup using Web Config" on page 58

Method2: Setup using Epson TM Utility

Install Epson TM Utility on the device and follow the wizard to configure the wireless LAN settings. Epson TM Utility is an iOS/Android application that allows you to change printer settings and set up wireless connections.

"Setup using Epson TM Utility" on page 61

CAUTION

- When using wireless LAN, make sure you disconnect the LAN cable. If a LAN cable is connected, wireless LAN is disabled.
- When you set up the access point at the same time, configure the access point in advance and check that it operates correctly.
- Examine the radio wave situation in the surrounding area before use.
- Avoid using the same channel that is used in the neighboring shops where Wireless LAN is used.
- When using the product in an environment with devices that generate radio interference, such as a microwave oven in the kitchen, please take the following points into consideration.
  - * Install the printer as far away as possible from devices that cause radio interference.
  - * Use channels that are away from frequency bands that cause radio interference.
  - * Install shielding plates between the printer and devices that generate radio wave interference.
  - * Use either 2.4 GHz or 5 GHz, whichever is free from radio wave interference.
  - * In auto channel setting for the access point, do not select a channel in which the devices may cause radio wave interference.

Setup using Web Config

How to set up using Web Config is also introduced in the video manual.

You can access the manual from the URL below.

☞ https://support.epson.net/p_doc/9a7/

Necessary Items

Prepare the following items.

A device for the setup which has a web browser.

When the printer is turned on during the following conditions, the SimpleAP mode is automatically activated and the "SimpleAP Start" sheet and guidance are printed. In this case, start the setup from step 4.

- No USB cable is connected
- No LAN cable is connected
- SSID and passphrase are not set
- Never connected via Bluetooth
- The optional wireless LAN unit is connected and [Wireless Chip Mode] is set to [Option Unit], which is the setting for using the optional wireless LAN unit.

Setup Procedure

1 **Open the roll paper cover of the printer, and then hold down the Feed button until the paper LED starts flashing, then release the button.**

2 **Close the roll paper cover.**

A guidance that starts with "Next Action" will be printed.

3 **Press the Feed button five times briefly (less than one second each), then press and hold the button for more than one second.**

"SimpleAP was selected. Release the Feed button." guidance will be printed, followed by a "SimpleAP Start" sheet.

4 Scan the QR code on the "SimpleAP Start" sheet with the device for setup and connect it to the printer.

The password is the serial number of the printer. The serial number is the last 10 digits of the SSID on the printed sheet.
If the device cannot scan the QR code, open the Wi-Fi settings screen of the device and connect to the SSID listed on the "SimpleAP Start" sheet.

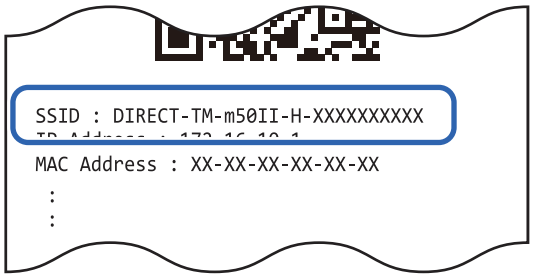

Once connected to the printer, guidance will be printed to start Web Config.

Depending on the device you are using, Web Config will start automatically.

5 If Web Config does not start automatically after connecting to the printer, scan the QR code in the guidance that says "WebConfig Start" at the beginning.

If the device cannot scan the QR code, start the device's web browser and enter the IP address of the printer in the address field.
The IP address is written on the "SimpleAP Start" sheet.

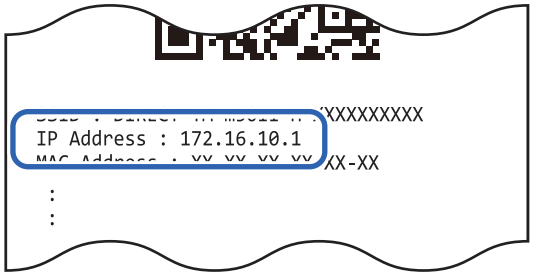

6 When the Web Config screen opens, select the "Wi-Fi" menu.

7 **Enter the password and select [OK] to log in to Web Config.**

The default password is the serial number of the printer. See step 4 for how to check the serial number.

To improve security, it is recommended to change the administrator password from the default password.

The password can be changed from [Advanced Settings] - [Product Security] - [Administrator Password] in Web Config.

8 **From the list of SSIDs displayed, select the SSID of the network you want to connect to and select [OK] .**

9 **Enter your network password and select [OK].**

When the Wi-Fi LED lights up, the connection is complete.

Setup using Epson TM Utility

Epson TM Utility is a utility that can be downloaded on the App Store or Google Play.

See "Utilities" on page 100 for more information on features.

Necessary Items

Prepare the following items.

- A device for the setup (iOS or Android device)
- Internet environment

Setup Procedure

1 **Download the Epson TM Utility on the store and install it on your device.**

iOS	Android
https://support.epson.net/p_doc/96c/	https://support.epson.net/p_doc/96d/

2 **Run the Epson TM Utility and select "Wi-Fi Setup Wizard" from the menu.**

Follow the on-screen instructions to complete the setup.

Routing Cables in Various Directions

For both upward and frontward paper ejection, there are four slots (one each in rear center, right, left, and bottom) through which you can pass cables.

❏ Rear center ("Passing Cables through the Rear Center" on page 63)

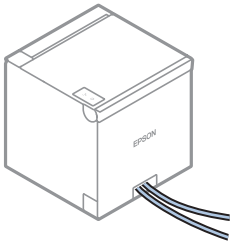

❏ Right/Left ("Passing Cables through the Left or Right" on page 63)

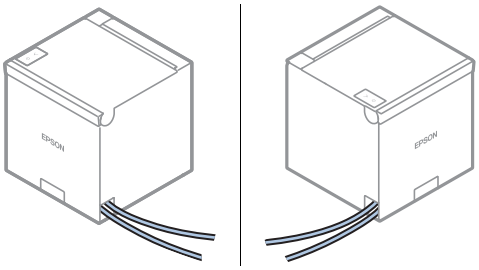

❏ Bottom ("Passing Cables through the Bottom" on page 64)

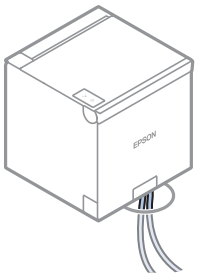

CAUTION Do not apply excessive force to the connectors when routing the cables. Doing so may damage the connectors.

Passing Cables through the Rear Center

Remove the cable slot cover, and then pass cables through the slot.

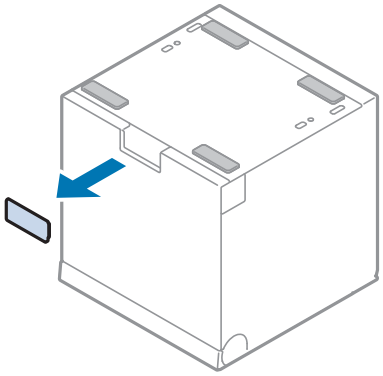

Passing Cables through the Left or Right

With your fingers, fold the tab on the side you want to pass cables and remove it to make a slot. If the slot is jagged, smooth it out with nippers or a file to prevent the cables from being damaged.

Once the tabs are removed, they cannot be put back on. Make sure to decide how to route the cables before removing the tab.

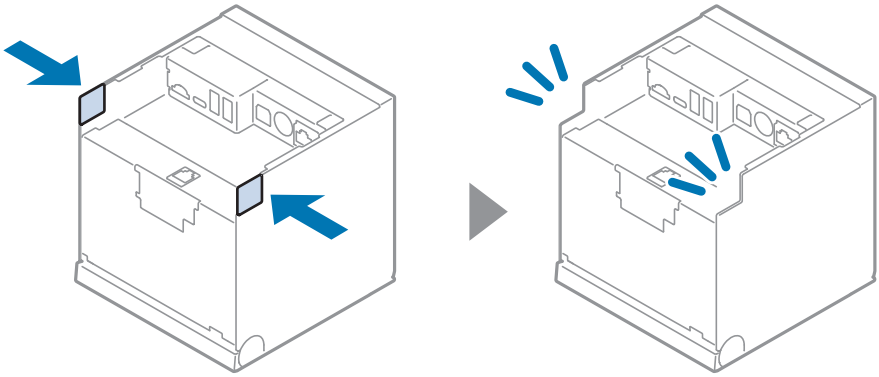

NOTE

The cable slot cover, which was removed from the center of the rear, can be reattached. To reattach the cover, hook the tab of the cover onto the rear cover, and then push the other side in.

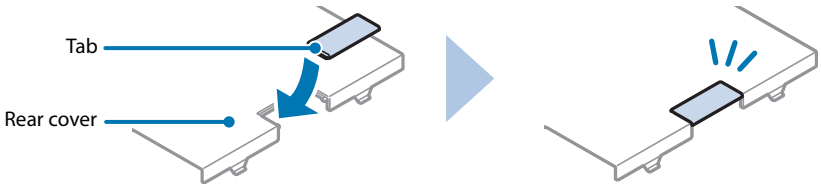

Passing Cables through the Bottom

If the desk or table on which the printer is to be installed has a hole through which cables can pass, it is best to pass the cables through the slot in the bottom of the printer.

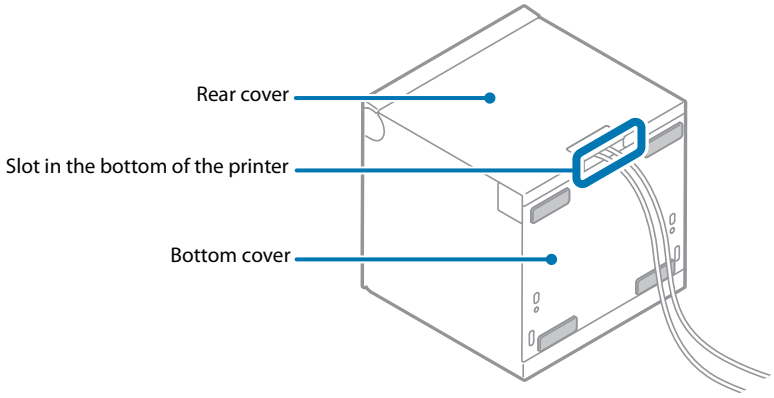

Advanced Usage

Software Settings

The printer offers memory switches and customized values which allow you to make various settings for the printer.

The settings can be made in any of the methods listed in the table below or by using the ESC/POS commands.

For an explanation of each function and setting, see "Overview of Each Function" on page 67.

NOTE

- The Software Setting Mode allows you to make the settings by operating the buttons on the printer. For instructions on how to operate the buttons, see "Software Setting Mode" on page 82.
- For the settings that can be set by the ESC/POS commands and how to set them, refer to the ESC/POS Command Reference. For more details, see "Application Development Information" on page 95.

Item \ Method	Epson TM Utility	TM-m50II Utility	Software Setting Mode
Print density	✓	✓	✓
Print speed	✓	✓	✓
Automatic Paper Reduction	✓	✓	✓
Auto Paper Feed&Cut at cover close	✓	✓	✓
Paper width	✓	✓	✓
Top Margin	✓	✓	✓
Default Character Code Page	✓	✓	✓
Default International Character Set	✓	✓	✓
Thai Character Composition			✓
Embedded Font Replacement			✓
Multi-Language Font	✓		✓
Font Priority			✓
Interface Selection			✓
USB Interface Settings	✓	✓	✓
Interface switch waiting time	✓	✓	✓
Main connection interface	✓	✓	✓
Auto Line Feed	✓	✓	✓
Output Paper-end Signals	✓	✓	✓
Error Signal Output	✓	✓	✓

Item \ Method	Epson TM Utility	TM-m50II Utility	Software Setting Mode
Wireless Chip Mode			✓
Network Tethering	✓	✓	✓
USB-PD Mode	✓	✓	✓
BLE Beacon		✓	✓
Command Execution (Offline)	✓	✓	✓
Power Supply Output	✓	✓	✓
Column Emulation	✓	✓	✓
Power Supply SW Setting	✓	✓	✓
NV Capacity			✓
Buzzer Control	✓	✓	✓
Pre-feed before next print		✓	✓
Batch rotate print (Upside Down)	✓	✓	
Method for canceling recoverable error	✓	✓	
Handshaking (Condition for BUSY)	✓	✓	
Receipt Enhancement	✓	✓	
Bluetooth interface settings	✓	✓	
Bluetooth communication interval during power saving mode	✓	✓	

Overview of Each Function

Print Density

Monochrome

Selectable from 70% to 130% (5% increment)

Initial setting: 100%

Depending on the paper type, it is recommended to set the print density as shown in the table below for the best print quality.

Supported papers	Print density
AP45KS-ND, AP50KS-ND, KT55PF	100%
KT48FA, KT55FA, KT48PF, P5047(55)	110%

NOTE

When the print density level is increased, print speed may be reduced.

Multi-Tone

Selectable from 70% to 130% (5% increment)

Initial setting: 100%

NOTE

- With multi-tone printing, 16-stage printing is available.
- Set the monochrome print density first before setting the multi-tone print density.

Print Speed

- High Speed (500 mm/s)
- Standard Speed (450 mm/s) (initial setting)
- Middle Speed (350 mm/s)

CAUTION

- The print speed is restricted according to the Number of head energizing parts setting.
  The maximum 500 mm/s is possible with the One-part energizing (default) option.
  The Number of head energizing parts setting can be changed using ESC/POS commands. ("ESC/POS" on page 95)
- The maximum printing speed when using 58 mm is 450 mm/s.

NOTE

- When setting the print speed to "High Speed", set the print density to the recommended setting to ensure good print quality.
- Depending on print conditions, such as print duty, print head temperature, and data transmission speed, print speed is automatically adjusted, which may cause white lines due to intermittent print (the motor sometimes stops). To avoid this, keep the print speed constant by setting it lower.
- By using a setting tool such as TM-m50II Utility, the print speed can be selected from 17 levels (from the slowest level 1 to the fastest level 17). (Default setting: level 16)

Automatic Paper Reduction

Upper Margin

- Enable
- Disable (initial setting)

Lower Margin

- Enable
- Disable (initial setting)

Line space reduction rate

- 25%
- 50%
- 75%
- Not reduced (initial setting)

Line feed reduction rate

- 25%
- 50%
- 75%
- Not reduced (initial setting)

Barcode height reduction rate

- 25%
- 50%
- 75%
- Not reduced (initial setting)

Character height reduction

- 75% reduction of inner spacing
- 75% reduction of inner spacing and shrinking the character height
- Not reduced (initial setting)

NOTE

- No reduction is applied to blank dot lines that exist in a graphic data.
- Reduced barcodes are not guaranteed to be correctly scanned. Make sure to check whether they are properly read by a barcode reader that is actually used.

Auto Paper Feed&Cut at cover close

- Enable (Cut) (initial setting)
- Disable (Not cut)

Paper width

- 80mm (initial setting)
- 58mm

Top Margin

By feeding paper backward before starting to print, you can reduce the top margin.

- Default (9.5 mm) (initial setting)
- Minimum (2.0 mm)

NOTE

- Remove all ejected paper before printing with backfeed.
- Disable the automatic top logo setting when enabling backfeed.
- Even if the "backfeed" has been enabled, it is not performed during the self-test.
- To avoid paper jams when the printer is running under the operation environment, set the top margin to 5 mm {0.2"} or more. Paper jams may be more likely to occur in hot and humid environments or when using paper that curls easily.
- When the paper is fed backward, the paper may get wrinkled or smeared due to a slack in the roll. It is recommended to use thermal paper that has high resistance to abrasion.
- Make sure to feed the paper by at least 20 mm before moving the auto cutter. It the paper feed length is not enough, it may cause a paper jam. ("Minimum Paper Length when Cutting" on page 103)

NOTE

When using the TM-m50II Utility or Epson TM Utility, you can specify values in 0.5 mm increments.

Character/Font Settings

Default Character Code Page

Selectable from 43 pages including user defined page

Initial setting: PC437: USA, Standard Europe

Default International Character Set

Selectable from 18 sets

Initial setting: USA

Thai Character Composition

- Thai 3 pass
- Thai 1 pass (initial settings)

Embedded Font Replacement

Font A Replacement

- Does not replace (initial setting)
- Font B
- Special Font A
- Special Font B

Font B Replacement

- Font A
- Does not replace (initial setting)
- Special Font A
- Special Font B

Multi-Language Font

- Thai, Vietnam (initial setting)
- Simplified Chinese

Font Priority

- ANK
- Japanese (initial setting)
- Simplified Chinese
- Traditional Chinese
- Korean

Interface Selection

- Bluetooth
- Built-in USB (USB-B)
- Ethernet/Wi-Fi
- USB-PD
- Multiple (initial setting)
- Multiple (except Bluetooth)

Interface Settings

USB Interface Settings

Class

- USB vendor-defined class
- USB printer class (initial setting)

IEEE1284 Device ID

- Do not output IEEE1284 Device ID
- Output IEEE1284 Device ID (initial setting)

USB power-saving function

- Enable
- Disable (initial setting)

NOTE

- The Class setting is applied only to the USB-B connector.
- The USB power-saving function is enabled in the following cases.
  * The USB power-saving function of the printer is enabled.
  * The class is set to vendor-defined class.
  * The system allows the USB driver to support the USB power-saving function.

Interface switch waiting time

Select the number of seconds from 1 to 10 in increments of 1 second, or 60 seconds.

Initial setting: 10 seconds

Main connection interface

- Built-in USB (USB-B)
- Bluetooth
- Ethernet/Wi-Fi
- USB-PD
- Auto (An interface that received data first) (initial setting)
- None (No main connection I/F)

CAUTION

- When using this printer with multiple interfaces, make sure the interface that is always connected to be set as the main connection.
- You cannot use wired LAN and wireless LAN at the same time.
- When you do not use the Bluetooth function, set the Bluetooth security level to "Middle" or "High" to prevent unauthorized access to the printer over Bluetooth. You can change the security level by using Epson TM Utility, TM-m50II Utility, or in the Interface Setup mode.

The “Auto” setting allows you to use the first interface you communicate with as the main connection and the other interfaces as secondary connections after you turn on the printer. For the limitations on the main connection and secondary connections, see the table below.

Connection Interface	Connection Priority	ESC/POS Command Restrictions	Retaining of Print Settings When Connection Is Terminated
Main connection	High	No	Retained
Secondary connection	Low	Yes*	Initialized

*For details, see the ESC/POS Command Reference.

NOTE

- The displayed items vary depending on the interface configuration.
- For information about the function, see "Printing Using Multiple Interfaces" on page 31.

Auto Line Feed

- Always disabled (initial setting)
- Always enabled

Output Paper-end Signals

- Enable (Roll paper near-end or end detection) (initial setting)
- Disable

Error Signal Output

- Enable (initial setting)
- Disable

Wireless Chip Mode

You can choose to use the built-in Wi-Fi function of the printer or use the optional wireless LAN unit.

- Option Unit (use the optional wireless LAN unit)
- Built-in (use the built-in Wi-Fi function of the printer) (initial setting)

CAUTION	If "Option Unit" is selected for [Wireless Chip Mode], the Bluetooth function of this product cannot be used.

Network Tethering

To use this function, select the OS of the smart device you will use.

- Disable (initial setting)
- iOS
- Android
- Windows

USB-PD Mode

Setting	Explanation
Normal (initial setting)	Supplies power to and communicates with a smart device connected to the USB-C connector (USB-PD compatible).
Source Fixed	Supplies power to a smart device connected to the USB-C connector (USB-PD compatible) disabling communication through the connector. Therefore, the network tethering functionality cannot be used. Select this mode if you want to supply power to an iOS device while connecting to it via Bluetooth.
Sink Fixed	Communicates with a smart device connected to the USB-C connector (USB-PD compatible) disabling power supply to the device. Therefore, the device cannot be charged. Select this mode when communicating with Android or Windows devices that do not support USB-PD.

BLE Beacon

- Disable (initial setting)
- Enable

Command Execution (Offline)

- Enable (initial setting)
- Disable

Power Supply Output

- Level 1 (Low)
- Level 2
- Level 3 (High) (initial setting)

Other Settings

Column Emulation

- 42/30 column mode (standard column mode) (initial setting)
- 48/36 column mode

Power Supply SW Setting

You can turn the printer on and off by operating a breaker without using the power switch (power button).

- Manual (initial setting)
- Auto

NOTE	For details about “Power Supply SW setting”, refer to "Precautions when Developing Applications" on page 102.

NV Capacity

User NV Memory

- 1 KB (initial setting)
- 64 KB
- 128 KB
- 192 KB

NV Graphics Memory

- None (0 KB)
- 64 KB
- 128 KB
- 192 KB
- 256 KB
- 320 KB
- 384 KB (initial setting)

Buzzer Control

NOTE

- For information about how to connect the optional external buzzer, see "Connecting the Optional External Buzzer" on page 45.
- When the optional external buzzer is enabled, a cash drawer cannot be used. Be sure to disable it when you use a cash drawer.

Option Buzzer (model: OT-BZ20)

- Enable
- Disable (initial setting)

Buzzer Frequency(Error)

- Continuous (initial setting)
- 1 time
- No sound

Sound Pattern(Autocut)

Selectable from Patterns A to E

Initial setting: Pattern A

Buzzer Frequency(Autocut)

- 1 time (initial setting)
- No sound

Sound Pattern(Pulse 1)

Selectable from Patterns A to E

Initial setting: Pattern A

Buzzer Frequency(Pulse 1)

- 1 time (initial setting)
- No sound

Sound Pattern(Pulse 2)

Selectable from Patterns A to E

Initial setting: Pattern A

Buzzer Frequency(Pulse 2)

- 1 time (initial setting)
- No sound

Pre-feed before next print

- Enable
- Disable (initial setting)

NOTE

- When using this function, the top margin is approximately 10.5 mm.
- This setting becomes invalid if you change the "Top Margin" setting from the initial setting (9.5 mm).

Batch rotate print (Upside Down)

When the printer is installed so that the paper is ejected frontward, enable this function to print in an easy-to-view orientation.

- Enable
- Disable (initial setting)

Method for canceling recoverable error

- Command only
- Command, and close of the roll paper cover (initial setting)

Handshaking (Condition for BUSY)

- Receive buffer full/Offline (initial setting)
- Receive buffer full

NOTE	In either case above, the printer enters the BUSY state after power is turned on, and when a self-test is being run.

Receipt Enhancement

You can configure settings such as logo placement when automatically printing a registered logo.

Automatic top logo printing

- Key code
- Justification
- Number of deleted lines after top logo printing

Automatic bottom logo printing

- Key code
- Justification

Advanced settings for automatic top/bottom logo printing

- Print the top logo when paper is fed to the cut position (initial setting: Enabled)
- Print the top logo when the printer is turned on (initial setting: Disabled)
- Print the top logo when the cover is closed (initial setting: Enabled)
- Print the top logo when the buffer is cleared during a recoverable error (initial setting: Enabled)
- Print the top logo when feeding paper using the feed button is completed (initial setting: Disabled)

Bluetooth interface settings

- Device name (initial setting: TM-m50II-H_xxxxxx)
- Security (initial setting: Middle)
- Auto Re-Connect with iOS device (initial setting: Enabled)

NOTE

The device name is initially set to TM-m50II-H_xxxxxx.
(xxxxxx refers to the last 6 digits of the serial number labeled on the back of your printer.)
See "Bluetooth Interface" on page 139 for default values for other items and notes on the automatic reconnection feature for iOS devices.

Bluetooth communication interval during power saving mode

- Level 1 (Standard) (initial setting)
- Level 2 (Short)

NOTE

By changing the setting to "Level 2 (Short)," you can shorten the time until printing begins or the time until information is shown on the customer display connected to the printer.
However, because the communication frequency increases, the power consumption of the printer and the host also increases.
Also, depending on the host, this setting may not be enabled, and the host-specified communication interval may be used.

MAC Address Confirmation

You can check the printer's MAC address using the following procedures.

- Printing the status sheet
- A printer self-test
- Using a Web browser to confirm (Web Config function)

You can check the MAC address for network tethering using the following method.

- Printing the status sheet (NW Tethering MAC)

Setting/Check Modes

As well as print mode, the following modes are also provided for making various printer settings and checking items.

- Self-test mode
- NV graphics information print mode
- Receipt Enhancement information print mode
- Software settings mode
- Restore default values mode
- Interface setup mode
- TM-Intelligent settings information print mode
- Peripheral Device Information print mode
- Hexadecimal dumping mode

The self-test mode or hexadecimal dumping mode is selected depending on the operation performed when the power is turned on.

NV graphic information print mode, Receipt Enhancement information print mode, Software settings mode, and Restore default settings mode are selected depending on the Feed button operation performed during a self-test.

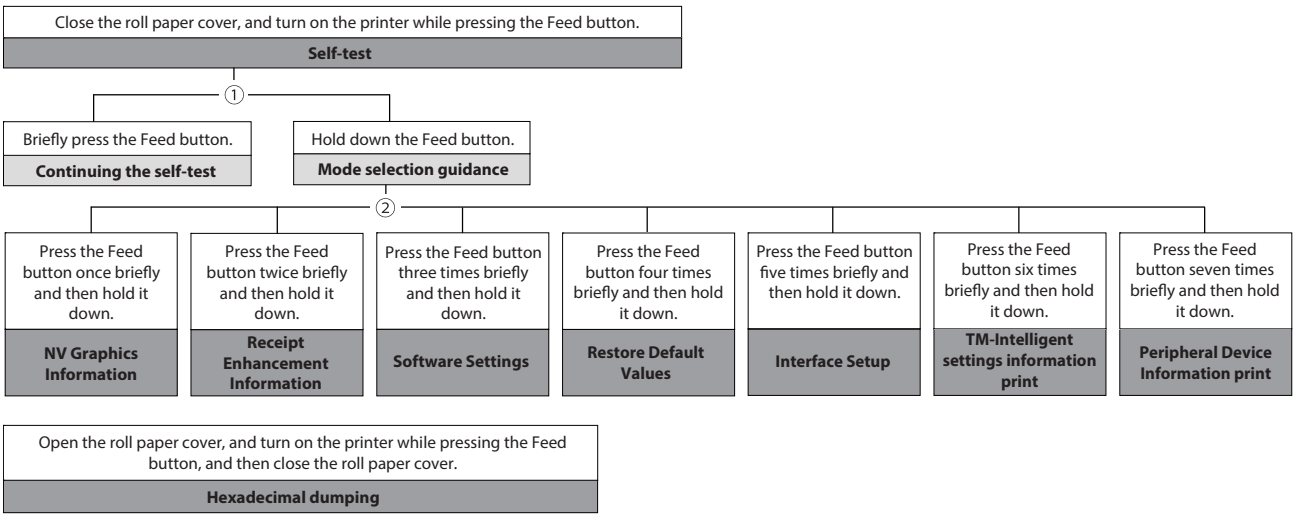

In 1 and 2, the following guidances are printed, the Paper LED flashes, and instructs the user's operations.

1. Continuing self-test guidance

```
Select Modes by pressing Feed Button.
  Continue SELF-TEST: Less than 1 second
  Mode Selection    : 1 second or more
```

2. Mode selection guidance

Mode Selection

Modes
0: Exit and Reboot Printer
1: NV Graphics Information
2: Receipt Enhancement Information
3: Customize Value Settings
4: Restore Default Values
5: Interface Setup
6: TM-Intelligent Information
7: Peripheral Device Information
8: or more: None

Select Modes by executing following procedure.
step 1. Press the Feed button less than 1 second as many times as the selected mode number.
step 2. Press Feed button for 1 second or more.

Self-test Mode

You can check the following items using the self-test.

- Product name
- Firmware version
- Product serial number
- Interface type
- Condition for BUSY
- Resident fonts
- Thai characters print mode setting
- Whether the automatic line feed function is enabled or not
- Customer display connection information
- Print density setting
- Recovery point information
- Maintenance counter information (head running length, number of times of autocutting)

Follow the steps below. You can also run the self-test using the ESC/POS commands.

1 **Close the roll paper cover.**

2 **While pressing the Feed button, turn on the printer. (Hold down the Feed button until printing starts.)**

After printing the current print status, a Continuing self-test guidance is printed, and the Paper LED flashes.

3 **Briefly press the Feed button (less than one second) to continue the self-test.**

The printer prints a rolling pattern on the roll paper, using the built-in character set.
After "*** completed ***" is printed, the printer initializes and switches to standard mode.

NV Graphics Information Print Mode

Prints the following NV graphic information registered to the printers.

- Capacity of the NV graphics
- Used capacity of the NV graphics
- Unused capacity of the NV graphics
- Number of NV graphics that are registered
- Key code, number of dots in X direction, number of dots in Y direction to be defined.
- NV graphics data

NOTE

For details on NV graphics, see "NV Graphics Memory" on page 26.

Follow the steps below.

1. **After running a self test, hold down the Feed button for at least one second, and then select the Mode selection.**
   The Mode selection guidance is printed, and the Paper LED flashes.

2. **After briefly (less than one second) pressing the Feed button once, and then hold it down for at least one second, to print the NV graphics information.**
   After information printing, the Mode selection guidance is printed again.

3. **To finish, turn off the power, or select “Exit and Reboot Printer”.**

Receipt Enhancement Information Print Mode

You can check the following items using the R/E information mode:

- Automatic top logo setting
- Automatic bottom logo setting
- Extended settings for automatic top/bottom logo

Follow the steps below.

1. **After running a self test, hold down the Feed button for at least one second, and then select the Mode selection.**
   The Mode selection guidance is printed, and the Paper LED flashes.

2. **After briefly (less than one second) pressing the Feed button twice, hold it down for at least one second, to print the R/E information.**
   After information printing, the Mode selection guidance is printed again.

3. **To finish, turn off the power, or select “Exit and Reboot Printer”.**

Software Setting Mode

Set the printer's memory switches and customized values.

See "Software Settings" on page 65 for information about available functions and settings and how to set them.

> **NOTE**
> You can also make the software settings using the ESC/POS commands.

Follow the steps below.

1 **After running a self test, hold down the Feed button for at least one second to enter the Mode selection.**

The Mode selection guidance is printed, and the Paper LED flashes.

2 **Briefly press the Feed button three times (less than one second), and then hold it down for at least one second to enter the Software settings mode (Customized value setting).**

The Software setting mode guidance is printed, and the Paper LED flashes.

```
Customize Value Settings


Modes
  0: Exit
  1: Print Current Settings
  2: Print Density
  3: Print Speed
  4: Automatic Paper Reduction
  5: Auto Paper Feed&Cut at cover close
  6: Paper Width
  7: Top Margin
  8: Character/Font Settings
  9: Interface Selection
  10: Interface Settings
  12: Command Execution (Offline)
  13: Power Supply Output
  14: Other Settings

Select Modes by executing following
procedure.
  step 1. Press the Feed button less
          than 1 second as many times
          as the selected mode number.
  step 2. Press Feed button for 1
          second or more.
```

3 **After briefly pressing the Feed button (less than one second) for the number of times shown in the print result, hold down the button for more than one second to select the setting items.**

The setting selected as the setting item, the current settings and initial settings are printed.
Depending on the setting item, you may need to continue selecting the setting item before the settings are printed.
For details on setting items, see "Software Settings" on page 65.

4 **Select a setting by briefly pressing the Feed button (less than one second) for the number of times applicable to the setting, and then hold down the button for more than one second to confirm your selection.**

After saving the settings, the Software setting mode guidance is printed, and the Paper LED flashes.

5 **To close Software setting mode, turn off the printer, or select "Exit" to return to Mode selection guidance, and then select "Exit and Reboot Printer".**

NOTE

- To select 0 as the item number, hold down the Feed button until printing starts.
- If the button is pressed a number of times that is not displayed by the Setup guidance, the operation is invalid and the same guidance is printed.

Restore Default Values Mode

In Restore default values mode, following values saved on NV Memory will be set back to initial settings. When any error occurs, you can use to specify the reason.

Setting Item	Restore default settings	Restore default settings and Delete definition data
Customized Value	✓	✓
Memory switch	✓	✓
R/E (Receipt Enhancement) settings	✓	✓
USB Interface Settings	✓	✓
Network settings	✓	✓
TM-Intelligent function settings	✓	✓
NV graphics	-	✓
NV bit image	-	✓
User defined page	-	✓
User NV memory	-	✓

Follow the steps below.

1 **After running a self test, hold down the Feed button for at least one second to enter the Mode selection.**

The Mode selection guidance is printed, and the Paper LED flashes.

2 **Briefly press the Feed button four times (less than one second), and then hold it down for at least one second to enter the Restore Default Values.**
The guidance is printed.

3 **Briefly press the Feed button once (less than one second), hold it down for at least one second. (Hold down the Feed button until the message of restore completion is printed.)**

NOTE

If you could not confirm that settings were restored to the default values, execute [Restore Default Values Mode] again. If the firmware version is 06.12 ESC/POS or later, the following message is printed when the restoration fails.

```
Failed restoration to Factory Default.
Please retry after restarting printer.
```

Interface Setup Mode

Use this mode to setup the interface and other settings.
Follow the steps below.

1 **After running a self test, hold down the Feed button for at least one second to enter the Mode selection.**
The Mode selection guidance is printed, and the Paper LED flashes.

2 **Briefly press the Feed button five times (less than one second), and then hold it down for at least one second to enter the Interface Setup mode.**
The guidance is printed.

3 **After briefly pressing the Feed button (less than one second) for the number of times shown in the print result, hold down the button for more than one second to select the setting items.**

Initialize

Select [Wi-Fi & Ethernet Setup] or [Bluetooth Setup] and select [Initialize] to restore the communication settings to the factory default. The printer is reset and restarted.

NOTE

If you could not confirm that the interface settings were initialized, execute [Initialize] again. If the firmware version is 06.12 ESC/POS or later, the following message is printed when the initialization fails.

```
Failed restoration to Factory Default.
Please retry after restarting printer.
```

SimpleAP mode

Select [Wi-Fi & Ethernet Setup] and select [SimpleAP] to start in SimpleAP mode. The printer is reset and restarted, and it begins printing the "SimpleAP Start" information.

Select this to quickly set up a network connection. For information on the Quick connection function, see "Simple Setup for Wireless LAN" on page 28.

Auto re-connect to iOS device

Select [Bluetooth Setup] and then select [Auto Re-Connect iOS], you can select whether to enable or disable auto reconnection to iOS devices.

NOTE

- For details on the auto re-connect function, see "Auto Reconnect Feature" on page 140.
- You can change the settings with TM-m50II Utility and Epson TM Utility.

Bluetooth Security Settings

Select [Bluetooth Setup], and then select [Security], and you can change the Bluetooth security settings.

If you select Low, Middle, or High in the security settings, the communication method will be Bluetooth Classic, and Bluetooth Low Energy (LE) will be disabled. Conversely, if you select LE Secure Connections, the communication method will be Bluetooth LE, and Bluetooth Classic will be disabled.

CAUTION

- If you change the security settings, the link key (pairing information) will be deleted. If the printer is already paired with a terminal, unpair them and then pair again.
- When the security level is set to "Low", pairing is always possible, which increases the possibility of unauthorized use by a third party. Change the setting at your own discretion and responsibility with full understanding of the risk.
- To communicate via Bluetooth LE, use the development kit (Epson ePOS SDK for iOS) that supports the dedicated profile.

NOTE

- You can also change the settings with TM-m50II Utility or Epson TM Utility. If the setting item does not appear, please update the utility.
- Bluetooth LE is supported with firmware version 06.10 ESC/POS or later.

Bluetooth Classic

Security	Pairing Mode	Pairing Method
Low	Pairing is always possible	Just Works
Middle (initial setting)	Pairing is possible for one minute after printing the status sheet	Just Works
High	Pairing is possible for one minute after printing the status sheet	Numeric Comparison/Passkey Entry

Bluetooth LE

Security	Pairing Mode	Pairing Method
LE Secure Connections *	Always searchable Pairing is possible for one minute after printing the status sheet	Passkey Entry

* Please ensure that the device you are using is compatible with LE Secure Connections before using it.

Pairing method when the security is set to Middle/High (from the printer)

When the security is set to Middle/High and the printer is ready to be paired, perform the following procedure.

1 **Load paper in the printer, and then turn it on.**

> **CAUTION**
> - Make sure no errors have occurred and that the printer is not off-line.
> - You cannot pair the printer while the network is starting up immediately after the power is turned on.

2 **Open the roll paper cover, hold down the FEED button (two seconds), and then close the roll paper cover.**

A guidance that starts with "Next Action" will be printed.

3 **Briefly press the Feed button (less than one second), and then hold down the button for at least one second.**

4 **A status sheet is printed, and the Bluetooth LED flashes a pattern indicating that pairing is now possible.**

After this, the printer will be able to be paired for one minute only.

> **NOTE**
> You can enable pairing also by printing the status sheet by pressing the status sheet button.

Pairing method when the security is set to High (from the host)

When the security is set to High and the printer is ready to be paired, perform the following procedure.

1 **Search for the printer on the Bluetooth settings screen on the host device.**

2 **Select the printer you want to pair with.**

The printer prints the Passkey.

3 **Check that the printed Passkey and the Passkey displayed on the host device match, and then select "Pairing" on the host device.**

Bluetooth communication interval during power saving mode

Select [Bluetooth Setup] and then [Low Power Level] to change the communication interval when waiting to receive data from the host in power saving mode.

By changing the setting to [Level 2], the time to start printing and the time to start displaying on the customer display connected to the printer can be reduced. However, since the frequency of communication increases, the power consumption of the printer and host will increase. Also, depending on the host, this setting may not be enabled and the host-specified communication interval may be used.

Settings	Communication Interval
Level 1 (initial setting)	250 ms
Level 2	15 ms

TM-Intelligent Settings Information Print Mode

This function allows you to print TM-Intelligent setting information currently registered in the printer.

Follow the steps below.

1. **After running a self-test, hold down the Feed button for at least one second to enter the Mode selection.**
   The Mode selection guidance is printed, and the Paper LED flashes.

2. **Briefly press the Feed button six times (less than one second), and then hold it down for at least one second to print the TM-Intelligent setting information.**
   After information printing, the Mode selection guidance is printed again.

3. **To finish, turn off the power, or select “Exit and Reboot Printer”.**

Peripheral Device Information Print Mode

This function allows you to print information for the device currently connected to the printer.

- Customer display information
- Wi-Fi adapter information
- Bluetooth adapter information
- Handheld scanner information

Follow the steps below.

1 **After running a self-test, hold down the Feed button for at least one second to enter the Mode selection.**
The Mode selection guidance is printed, and the Paper LED flashes.

2 **Briefly press the Feed button seven times (less than one second), and then hold it down for at least one second to print the Peripheral Device Information.**
After information printing, the Mode selection guidance is printed again.

3 **To finish, turn off the power, or select "Exit and Reboot Printer".**

Hexadecimal Dumping Mode

In hexadecimal dumping mode, data from the host device is printed in hexadecimal numbers and characters. By comparing the print outs and the program, you can check whether or not data is being sent to the printer correctly.

NOTE

- When there are no characters that correspond to the print data, " . " is printed.
- If you press the Feed button when there is less than one line of print data, one line is printed.
- During hexadecimal dumping mode, applications that check the printer status may not operate correctly. The printer only returns the status for the "Real-time transmission status" command.

Follow the steps below. Entering the hexadecimal dumping mode is also possible using the ESC/POS commands.

1 **Open the roll paper cover.**

2 **While pressing the Feed button, turn on the printer. (Hold down the Feed button until the Error LED turns on.)**

3 **Close the roll paper cover.**
From this point, all data received by the printer is printed in the corresponding hexadecimal numbers and ASCII characters.

Example of printing in hexadecimal dumping mode:

```
Hexadecimal Dump
To terminate hexadecimal dump,
press FEED button three times.




1B 21 00 1B 26 02 40 40 1B 69 . ! . . & . @ @ . i
1B 25 01 1B 63 34 00 1B 30 31 . % . . c 4 . . 0 1
41 42 43 44 45 46 47 48 49 4A A B C D E F G H I J

          ***  completed  ***
```

4 **To close hexadecimal dumping mode, turn off the printer after printing is complete, or press the Feed button for three times.**

Printing a Status Sheet

Follow the steps below to check the interface settings.

Note that if the Ethernet LED and Wi-Fi LED are flashing immediately after the printer is turned on, printing is not possible.

CAUTION

- After the status sheet is printed, only the print settings of the mainly connected interface are retained. For the mainly connected interface, see "Printing Using Multiple Interfaces" on page 31.
- Ethernet and Wi-Fi status sheets are not printed while the printing communication protocol is being established. They will be printed after the connection is cut off (including being cut due to a time out).
- The Bluetooth status sheet is not printed if status sheet printing is performed under the following conditions.
  * Bluetooth is connected when the Bluetooth security is set to "Medium" or "High"
  * An error occurs when the Bluetooth security is set to "Medium" or "High"
  * Time between when a pairing request is received and Passkey printing starts when the Bluetooth security is set to "High"
- "(none)" is printed for the "Connected Peripheral" if no peripherals are connected to the USB-A connector or USB-C connector.

Using the Status Sheet Button

1 Check that the printer is turned on.

Make sure the roll paper cover is closed.

2 If there is a bottom cover, remove the cover.

See "Removing the Printer Covers" on page 108 for details on removing the bottom cover.

3 Hold down the status sheet button for at least three seconds.

A guidance that starts with "Next Action" will be printed.

4 Press the Feed button briefly (less than one second) the number of times equal to the number indicated to the left of the status sheet you want to print, then hold down the button for at least one second.

Printing of a status sheet will start. The printer will return to normal mode after printing is finished.

Using the Feed button

1 Check that the printer is on.

2 Open the roll paper cover.

3 Hold down the Feed button for at least one second.

4 **Close the roll paper cover.**

A guidance that starts with "Next Action" will be printed.

5 **Press the Feed button briefly (less than one second) the number of times equal to the number indicated to the left of the status sheet you want to print, then hold down the button for at least one second.**

Printing of a status sheet will start. The printer will return to normal mode after printing is finished.

Status sheet printout example

```
HHH Network Status Sheet HHH

<General Info>
MAC Address          XX:XX:XX:XX:XX:XX
Wi-Fi Direct MAC     XX:XX:XX:XX:XX:XX
NW Tethering MAC     XX:XX:XX:XX:XX:XX
Firmware             XX.XX
                     (XXXXXXXXXXXXX)
Printer Model        TM-m50II-H
Device Name          XXXXXXXX

<Ethernet>
Network Status       Auto(Disconnected)
Port Type            Auto

<Wireless>
Chip Mode            Built-in
Comm Mode            None
Operation Mode       None
Comm Speed           None
SSID                 None
Channel              None
 :
 :

<TCP/IP IPv4>
IPv4                 Enable
Obtain IP Address    Unknown
IP Address           None
Subnet Mask          None
Default Gateway      None
APIPA                Disable
 :
 :

<TCP/IP IPv6>
IPv6                 Disable

 :
 :
```

```
*** Bluetooth Interface ***

Bluetooth Status
  BD_ADDR    : XX:XX:XX:XX:XX:XX
  Device Name: XXXXXX
  Module Ver : 1.00
  Module Info: XXXXXX*
  Mode       : Auto re-connect enable
  Security   : Middle
  BLE Beacon : Disable

   Bluetooth
     BT:XXXXXXXXXXXX
     DN:TM-m50II-H
```

Resetting the Interface Settings

Follow the steps below to restore the network settings to the factory default.

NOTE

The interface settings can also be initialized from the Interface Setup Mode. See "Interface Setup Mode" on page 84 for more details.

1 **Turn off the printer and close the roll paper cover.**

2 **If the bottom cover is attached, remove the cover.**

See "Removing the Printer Covers" on page 108 for details on removing the bottom cover.

3 **Hold down the status sheet button while turning on the printer.**

A message is printed indicating that resetting is being performed, and the printer restarts.

NOTE

If you could not confirm that the interface settings were initialized, execute [Initialize] again. If the firmware version is 06.12 ESC/POS or later, the following message is printed when the initialization fails.

```
Failed restoration to Factory Default.
Please retry after restarting printer.
```

TM-Intelligent Function

This product supports the TM-Intelligent function and provides the following functions.

- Server direct print
- Status Notification

You can set each function in the Setup Utilities. For details on the setting method for Epson TM-m50II Utility for Windows, see the TM-m50II Utility User's Manual.
You can also download a dedicated manual and sample programs from our website.

Server direct print

The server direct function allows this product to acquire print data from a Web server and then print.
By including print data in a response to request from this product, the Web server application can print to this product or a TM printer on the network.

The features are as follows.

- You can acquire print data from three different URLs.
- Print data is available in ePOS-Print XML format.
- You can use this product to print to TM printers on a network.

Regarding details on server direct printing, see the Server Direct Printing User's Manual.

Status Notification

Status Notification is used to periodically notify the TM printers with SDP support status to the Web server. The Web server automatically responds with an empty response.
Operating the printer management application created by the user with the Web server enables grasp of the status of the printers installed in a shop from a remote place.
For more details about the Status Notification, refer to the "Server Direct Print User's Manual".

Web Config

Web Config is a printer's built-in web page that allows you to check and change printer settings on your browser.

To use Web Config, you need to set your computer's IP address to the same segment as the printer.

How to Start Web Config

1 **Start your web browser on a computer or smart device on the network and enter the IP address of the printer in the address field.**

Example for HTTPS	Example for HTTP
IPv4: https://192.0.2.111/ IPv6: https://[2001:db8::1000:1]/	IPv4: http://192.0.2.111/ IPv6: http://[2001:db8::1000:1]/

2 **After Web Config starts, select the menu you wish to configure.**

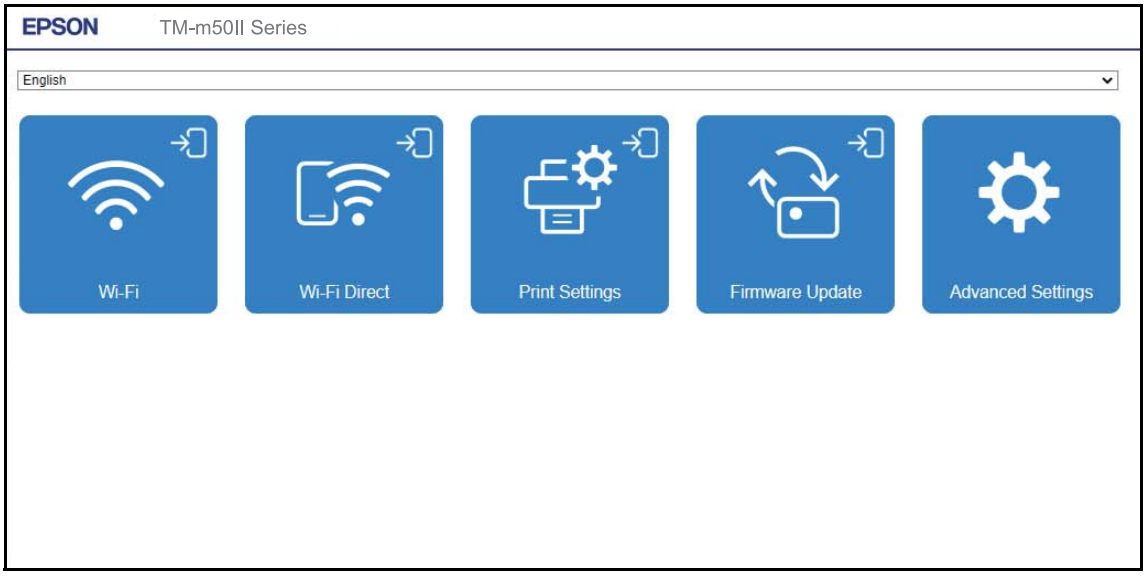

3 **When the authentication screen appears, enter your password and log in.**

The default password is the serial number of the printer. You can find the serial number by running the self-test or on the nameplate attached to the printer.

> **NOTE**
> Enable JavaScript in your browser. Because a self-signed certificate owned by the printer is used when accessing HTTPS, a warning will appear in the browser when Web Config is started.

What can be Configured in Web Config

For information on what can be configured in Web Config, refer to the Web Config Reference Guide. The Web Config Reference Guide can be obtained from the URL listed in "Download" on page 101.

Application Development Information

This chapter describes how to control the printer and gives information useful for printer application development.

Controlling the Printer

The printer supports the following command systems:

- ePOS-Print XML
- ePOS-Device XML
- ESC/POS

Users can control the printer by using the aforementioned commands, or the following development kits or drivers.

- Epson ePOS SDK
- OPOS ADK
- OPOS ADK for .NET
- JavaPOS ADK
- EPSON Advanced Printer Driver (APD)
- EPSON TM Virtual Port Driver
- Mac Printer Driver
- TM Series Printer Driver for Linux

ePOS-Print XML

ePOS-Print XML is the Epson original control command system for POS printers defined in XML. With ePOS-Print XML commands, you can print in environments where HTTP communication is available and from OS applications. For detailed information about ePOS-Print XML, see the ePOS-Print XML User's Manual.

ePOS-Device XML

ePOS-Device XML is a command system that uses XML to define functions to control various POS peripherals (including this product printer unit) connected to this product. An application creates a request message in XML format and sends it to this product using socket communications. For detailed information about ePOS-Device XML, see the ePOS-Device XML User's Manual.

ESC/POS

ESC/POS is the Epson original printer command system for POS printers and customer display. With ESC/POS commands, you can directly control all the printer functions, but detailed knowledge of printer specifications or combination of commands is required, compared to using drivers and applications.

For detailed information about ESC/POS commands, see the ESC/POS Command Reference for TM Printers that can be accessed from the following URL:

☞ https://support.epson.net/publist/reference_en/

Controlling the Cash Drawer

A pulse output is sent to drawer kick connector pin 2 or pin 5, and you can open the drawer.

You can also check the open/close status of the drawer by checking the signal level of the drawer kick connector pin 3.

These controls are executed by a driver or by commands.

ESC/POS Commands

Prepare the output command for the specified pulse and the status transmission command.

For details, see the ESC/POS Command Reference.

For Windows Printer Drivers (APD)

You can set the drawer to open when printing is started. For details, see the manual for drivers.

For details on control, see the manual for Status API of the driver.

OPOS (OCX Driver)

Register a cash drawer using the SetupPOS Utility, and control using the OpenDrawer method or the DirectIO function.

For details, see the "EPSON OPOS ADK MANUAL APPLICATION DEVELOPMENT GUIDE Cash Drawer" and the "UnifiedPOS Specification".

OPOS for .NET

Register a cash drawer using the SetupPOS Utility, and control using the OpenDrawer method or the DirectIO function.

For details, see the "EPSON OPOS ADK for .NET MANUAL Application Development Guide Cash Drawer (EPSON Standard)" and the "UnifiedPOS Specification".

Epson ePOS SDK

The output command for the drawer kick pulse and the status transmission command are provided in each SDK library. For details, see the user's manuals provided with each SDK.

NOTE

- Whether or not pin 2 or pin 5 operates the drawer kick connector depends on the connected cash drawer.
- You can acquire documents regarding the UnifiedPOS from the following link.
  https://www.omg.org/spec/UPOS

Controlling the Optional External Buzzer

You can set the optional external buzzer to buzz when an error occurs and when an automatic cut off occurs.
By using the driver or the command, you can specify when to sound the buzzer.
In addition, the beep pattern and how many times to sound the buzzer can be changed.

ESC/POS Command

Use the buzzer control command or the output command for the specified pulse.
For details, see the ESC/POS Command Reference.

For Windows Printer Drivers (APD)

Use the DirectIO function or the API for opening the drawer. For details, see the manual for Status API of the drivers.

OPOS (OCX Driver)

Register a POS printer using the SetupPOS Utility and control using the DirectIO function.
For details, see the "EPSON OPOS ADK MANUAL APPLICATION DEVELOPMENT GUIDE POSPrinter (TM Series)".

OPOS for .NET

Register a POS printer using the SetupPOS Utility and control using the DirectIO function.
For details, see the "EPSON OPOS ADK for .NET MANUAL Application Development Guide POSPrinter".

Epson ePOS SDK

The command for the buzzer function is provided in each SDK library. For details, see the user's manuals provided with each SDK.

NOTE

For details on setting the optional external buzzer, see "Connecting the Optional External Buzzer" on page 45.

Software

The following software is provided for application development.

Development Kit

Software	Description
Epson ePOS SDK	This is a development kit for controlling TM printers from native applications of smart devices or web applications. This includes libraries, manuals, and sample programs.
for Android	
for iOS	
for JavaScript	
EPSON OPOS ADK	This OCX driver can control POS peripherals using OLE technology.* Because controlling POS peripherals with original commands is not required on the application side, efficient system development is possible.
EPSON OPOS ADK for .NET	The OPOS ADK for .NET is a POS industry standard printer driver compatible with Microsoft POS for .NET. It allows you to develop applications that are compatible with the UPOS (Unified POS) specification. When developing applications, use a separate development environment such as Microsoft Visual Studio .NET.
EPSON JavaPOS ADK	JavaPOS is the standard specification which defines an architecture and device interface (API) to access various POS devices from a Java based system. Using JavaPOS standard API allows control with Java based applications of functions inherent to each device. A flexible design with Java language and JavaPOS enables many different types of computer systems, such as stand alone or network configuration, to use a same application. You can use JavaPOS to build applications and drivers independently of platforms. This allows flexible configurations using thin clients to meet the system requirements.
Epson TM Print Assistant	A native application that relays print data between an application and the TM printer. Epson TM Print Assistant allows you to develop a system that enables printing from a Web application or a URL-scheme capable application such as FileMaker, on a smart device connected to the TM printer.
for Android	
for iOS	

*: OLE technology developed by Microsoft divides software into part blocks. The OPOS driver is presupposed to be used with a development environment, such as Visual Basic, unlike ordinary Windows printer drivers. It is not a driver to be used for printing from commercial applications.
You can acquire documents regarding the UnifiedPOS from the following link.
https://www.omg.org/spec/UPOS

Drivers

Software	Description	Operating environment
EPSON Advanced Printer Driver (APD)	In addition to ordinary Windows printer driver functions, this driver has controls specific to POS. The Status API (Epson original DLL) that monitors printer status and sends ESC/POS commands is also attached to this driver.	Windows
EPSON TM Virtual Port Driver	This is a serial/parallel-USB/LAN conversion driver to make an Epson TM/BA/EU printer connected via USB or LAN accessible from a POS application through a virtual serial or parallel port. It allows you to directly control devices connected via USB or LAN with ESC/POS commands without making changes in the POS application that controls devices connected via a serial or parallel interface.	Windows
Mac Printer Driver	Mac printer driver allows you to control the printer using Common UNIX Printing System (CUPS) on macOS. This is a full raster printer driver. It is able to print images, text, and vector graphics etc., that an application displays. With this driver many printer controls are possible, such as paper cut timing control, cash drawer control, printing speed control, blank line skip, and upside-down printing. It also provides API and dialogues for print setting, sample applications, and logo setting utility.	macOS
TM Series Printer Driver for Linux	This driver allows you to control the printer using Common UNIX Printing System (CUPS) on GNU/Linux. This is a full raster printer driver. It is able to print images, text, and vector graphics etc., that an application displays.	GNU/Linux

Utilities

Software	Description	Operating environment
Epson TM Utility	A utility that is available on the App Store or Google Play. Use this to perform wireless connection setup and change settings on the printer from iOS and Android devices. In addition, the utility has the following functions. • Sample receipt printing • Printer status display • Quick pairing by NFC/QR code • Firmware update	iOS, Android
TM-m50II Utility	A utility for checking and changing various printer settings. Use this utility to: • Check the current settings • Test operation • Store logos • Set paper saving • Set printing control • Set communication interfaces • Configure the network settings • Configure the TM-Intelligent function settings • Save/restore settings	Windows
TM Bluetooth Connector	Pairs the Bluetooth printer with your device, and sets the Bluetooth port to be used by the printer driver and/or an application. Using this software makes it easy to pare the printer because the software searches for and displays only Epson Bluetooth printers, and allows you to search the printer by its product name.	Windows
Deployment Tool	Use to make network and printer settings simultaneously. Allows you to make settings efficiently at the time of introducing TM printers for the first time, or when configuring multiple TM printers at the same time.	Windows
Monitoring Tool	Use to check a list of status for the Epson printers connected to the network. You can also update certificates for multiple printers used for WPA-Enterprise in a batch.	Windows
TM-m50II-H Firmware Updater	Use this tool to update the printer's firmware. An executable file and the firmware are packaged together.	Windows

Others

Manual	Description
ePOS-Print XML User's Manual	Describes ePOS-Print XML statements. This manual comes with sample programs.
ePOS-Device XML User's Manual	Describes ePOS-Device XML statements. This manual comes with sample programs.
Server Direct Print User's Manual	Describes the details and specifications of Server Direct Print. This manual comes with sample programs.
Web Config Reference Guide	Describes items that can be configured in Web Config.

Download

You can obtain software and manuals from one of the following URLs.

For customers in North America, go to the following web site:

☞ https://www.epson.com/support/

For customers in other countries and regions, go to the following web site:

☞ https://epson.sn

Precautions when Developing Applications

This section describes information that you should be aware of when developing systems and applications using this product.

Power Button Settings

This function allows you to disable turning the printer on and off with the power button. See "Software Settings" on page 65 for setting instructions.

Settings

- Manual: The power button can be used to turn the printer on or off.
  If you turn off your circuit breaker, the printer will be back on when the breaker is turned on.
- Auto: The power button is disabled.
  If you turn off your circuit breaker, the printer will be back on when the breaker is turned on in the same way as when the setting is “Manual”.

How to Turn Off the Printer when the Setting is Auto

There are the following methods to turn off the printer when the power button setting is set to “Auto”.

- Turn off the power at the circuit breaker
- Disconnect the DC cable from the printer
- Disconnect the power plug from the wall outlet.

NOTE

If you want to turn off the printer without using the power button, it is recommended that you send the command to execute the power-off process to the printer before turning it off. This will save the latest maintenance counter values. The maintenance counter values are usually saved every two minutes. For more information about the command, see the ESC/POS Command Reference.

Minimum Paper Length when Cutting

When printing short in the vertical direction of the paper, cut the paper at least 20 mm away from the previous cutting position. If the cut paper is too short, the top edge of the paper may get caught in the opening of the case during paper feeding, causing a paper jam.

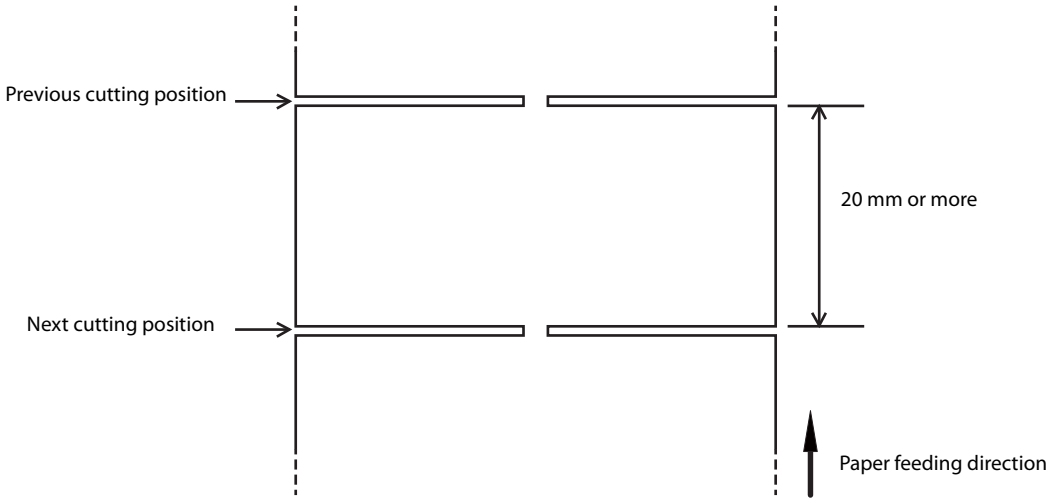

Notes on Printing Barcodes and Two-Dimensional Symbols

- Ensure adequate space around the code; “quiet zone” that is required for the code.
- To print PDF417 (two-dimensional symbol), the following settings are recommended.

  Module height: 3 to 5 times the module width

  Vertical size of the symbol: approximately 5 mm {0.20"} or more
- The recognition rate of ladder bar codes and two-dimensional symbols may vary depending on widths of the modules, print density, environmental temperature, type of paper, and characteristics of the reader. Make sure to check the recognition rate beforehand to determine the settings and use conditions so that the restrictions of the reader are satisfied.
- Reading quality of multi-gradation bar codes and two-dimensional symbols is not guaranteed.
- When printing a ladder barcode or two-dimensional symbol that is created as a graphics data, set the print speed to level 5.

Application Development and Distribution for iOS

If your application uses Bluetooth to communicate with the printer, Epson must submit the application to Apple before you submit it to the App Store. Please apply for each application you want to submit to the App Store from the URL below.

☞ https://global.epson.com/products_and_drivers/tm/en/mfi.html

Automatic Certificate Update Feature

This function automates registration and periodic updating of the security certificates registered to the printer. This reduces the burden on the user of tasks such as updating.

Overview

When printing from application software that uses Epson ePOS SDK for JavaScript, if using security communication (SSL/TLS communication), security certificates must be registered on the printer and updated periodically.

Using this function automates the registration and periodic updates of security certificates so that users do not have to perform this task.

Use of this function requires the serial number of the connected printer to be entered.

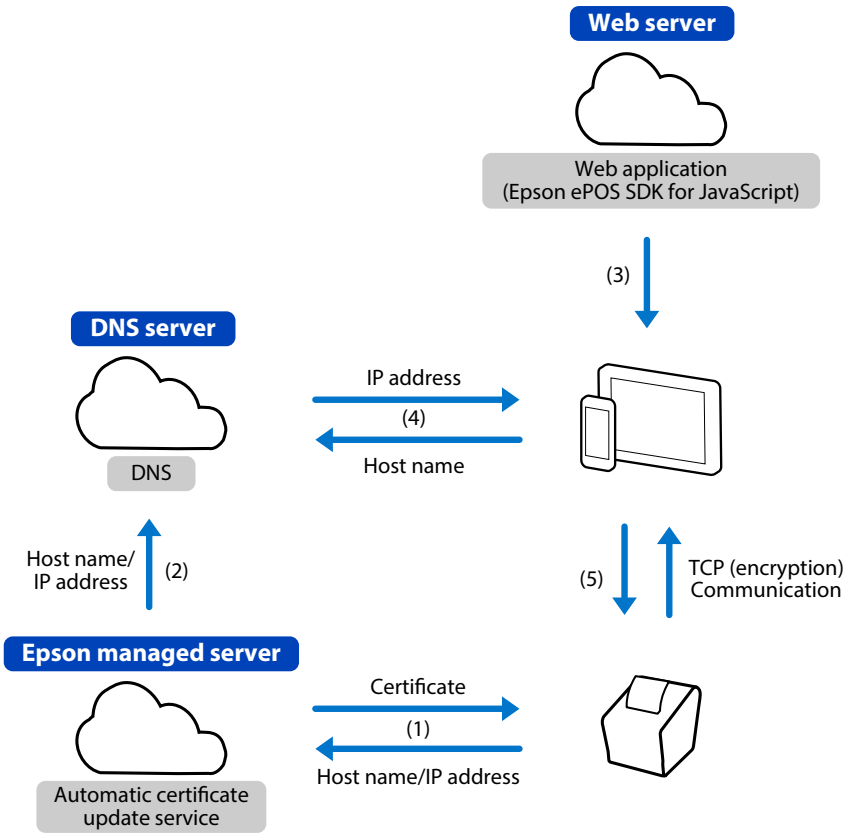

(1) The printer downloads a certificate from the Epson-managed server and sends the host name and IP address.
(2) The Epson server sets the host name and IP address to the DNS.
(3) The host device uses a browser and web application to print.
(4) The host device acquires the IP address associated with the host name from the DNS.
(5) The host device uses TCP (encryption) communications with the printer to print.

NOTE	No personal information is acquired from the customer on the Epson-managed server side.

Use environment

- Printer firmware version: Ver.06.02 ESC/POS or later
- Application software developed using Epson ePOS SDK for JavaScript Ver.2.24.0b or later
- Both the host device and printer are connected to an Internet environment

Software required

- Epson ePOS SDK for JavaScript Ver.2.24.0b or later

One of the following setting utilities.

- TM-m50II Utility
- Epson TM Utility
- Web Config

Refer to "Software" on page 98 for information on software.
Refer to "Web Config" on page 94 for Web Config details.

Limitations

- The security certificate is updated at printer startup and at a set time (if the printer has an update time set). If the printer is to run continuously without being turned off, be sure to set the update time.
- The printer will restart when the security certificate is updated. Since the printer cannot be used during the restart, set the update time to a time when the printer is not in use.
- Use NTP, etc., to set the printer time. This function may not operate correctly if the printer time is very incorrect.
- Depending on the proxy configuration, this function may not be usable. In this case, add the following to the browser's proxy exclusion list.
  *.omnilinkcert.epson.biz
- If a security certificate is already registered, overwrite it.
- This function requires ISRG Root X1 in the host device certificate store.
- When saving the settings of the printer using TM-m50II Utility or Epson TM Utility, save the security certificate as well. Otherwise, the settings may not be restored correctly.

Implementation

Programming in Epson ePOS SDK for JavaScript

For information on how to program in Epson ePOS SDK for JavaScript, refer to the user manual and samples included in Epson ePOS SDK for JavaScript.

Printer settings

1 Use TM-m50II Utility, Epson TM Utility, or Web Config to configure the following settings.

- Automatic Update of CA-signed certificates: Enable the setting
- Update time: Set the time to update the certificate
- Time Configuration: Set correct time (TimeServer or UTC, and time difference)
- Proxy: Set up proxy as needed

2 Connect the host device and printer to an Internet environment.

3 Print from application software developed using Epson ePOS SDK for JavaScript.

To use this function, the host name of the printer must be designated when executing a connect method. The host name is generated by converting the serial number of the printer.
A program to enter the printer's serial number is necessary on the application side.
Refer to the sample programs in Epson ePOS SDK for JavaScript for information on how to convert to the host name.

Operation Check

Print the status sheet to check the status of the automatic update of CA-signed certificates.

```
Auto Cert Update : Enable
 Server Access   : OK
```

Auto Cert Update / Automatic update of CA-signed certificates setting

- Disable: Certificates are not automatically updated
- Enable: Certificates are automatically updated

Server Access / Result of the last communication with the server for automatic certificate update

- OK: Successfully communicated
- Unknown: Was not communicating or is in communication
- NG (Failure): Communication failed

If "NG (Failure)" is printed, check the following.

- Is the printer connected to the Internet?
- Is the time setting of the printer correct?

Handling

This chapter describes basic handling of the printer.

Turning the Power On/Off

Use the power button to turn the printer on or off.

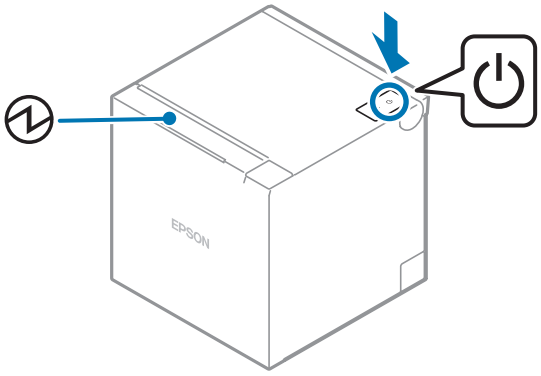

NOTE	You can turn the printer on and off by operating the breaker without using the power button. For more details, see "Precautions when Developing Applications" on page 102.

Turning the Power On

Hold down the power button until the power LED turns on, then release the button.

Turning the Power Off

Hold down the power button until the power LED starts flashing, then release the button.
The power LED will stop flashing, all LEDs will turn off, and the printer will turn off.

Removing the Printer Covers

Follow the steps below to remove the printer covers.

When Ejecting Paper Upward

1 **Remove the cable slot cover.**

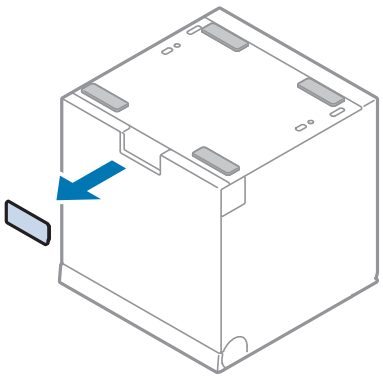

2 **Put your fingers on the rear cover as shown and then remove it.**

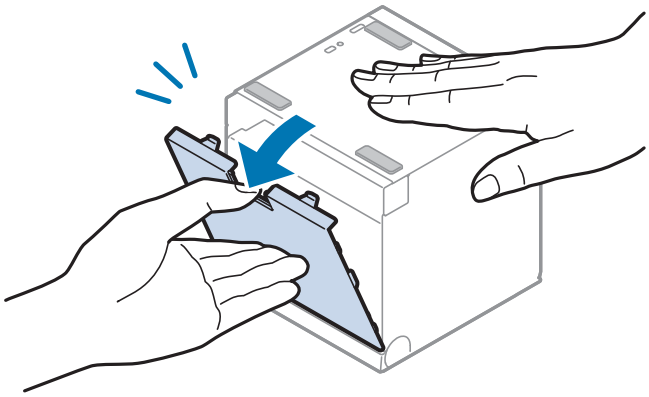

3 **Put your fingers on the bottom cover as shown and then remove it.**

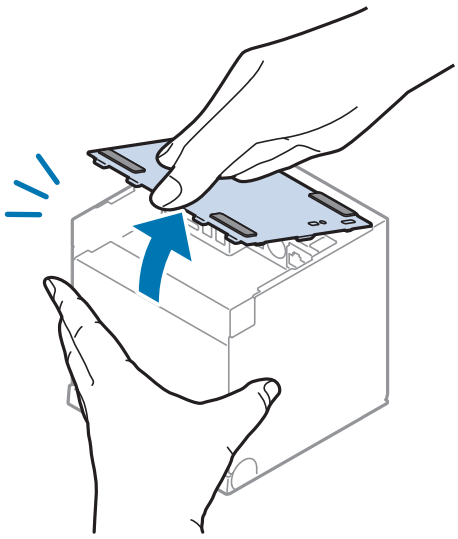

When Ejecting Paper Frontward

1 **Remove the cable slot cover.**

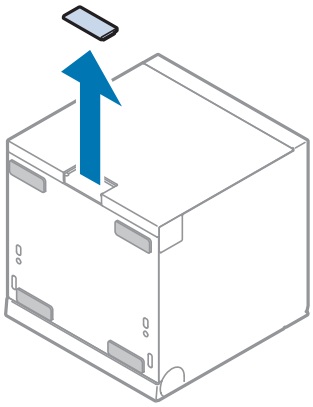

2 **Put your fingers on the rear cover as shown and then remove it.**

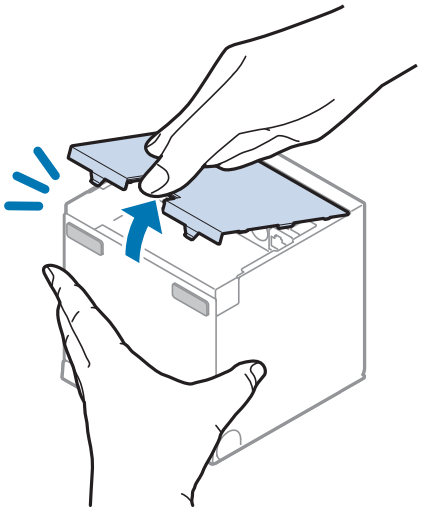

3 **Put your fingers on the bottom cover as shown and then remove it.**

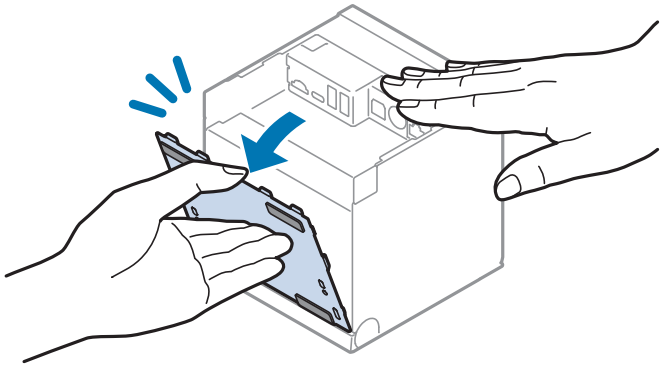

Attaching the Printer Covers

Depending on attachment positions of the rear and bottom covers, paper eject direction changes. Decide from which way to eject paper according to the installation location of the printer.

Follow the steps below to attach the printer covers.

> **NOTE**
> When you pass power or interface cables through the left, right, or bottom of the printer, the cable slot cover will help keep the back of the printer flat and neat looking. See "Routing Cables in Various Directions" on page 62 for instructions on how to install the cable slot cover and route the cables.

For Ejecting Paper Upward

1 **Align the catches and attach the bottom cover to the printer.**

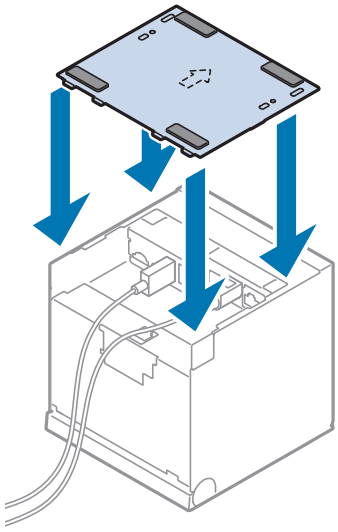

2 **Hook the catches into the bottom cover and attach the rear cover to the printer.**

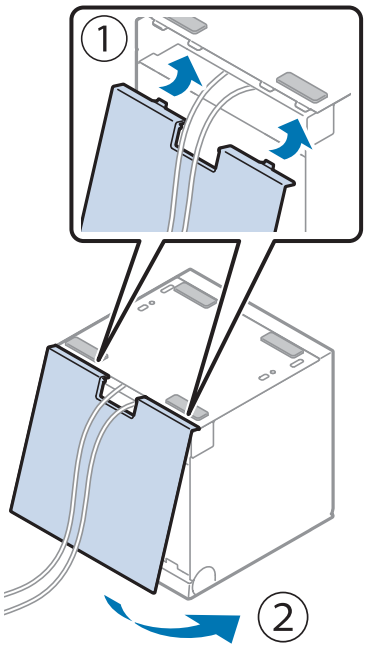

For Ejecting Paper Frontward

1 **Align the catches and attach the rear cover to the printer.**

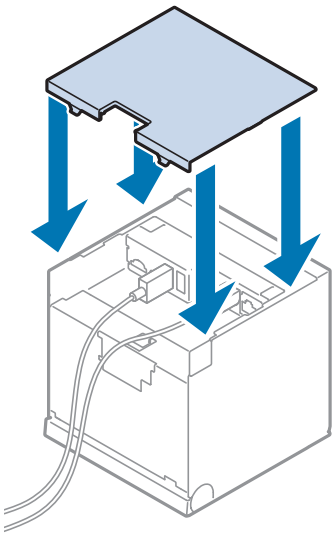

2 **Hook the catches into the rear cover and attach the bottom cover to the printer.**

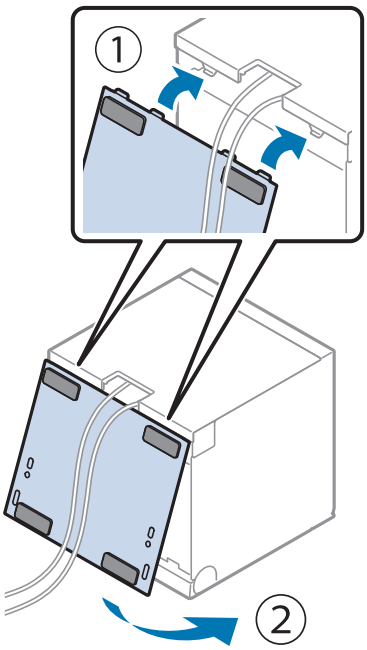

Installing Roll Paper

Follow the steps below to install the roll paper.

CAUTION	Make sure you use a specified roll paper type.

When Ejecting Paper Upward

1 **Use the cover open lever to open the roll paper cover.**

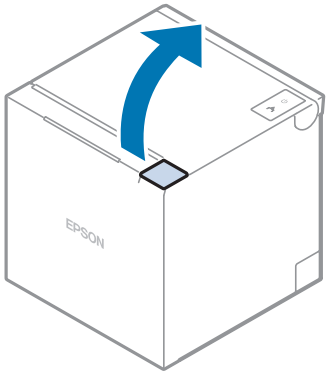

2 **Remove the used roll paper or roll paper core, if any.**

3 **Install the roll paper in the correct direction.**

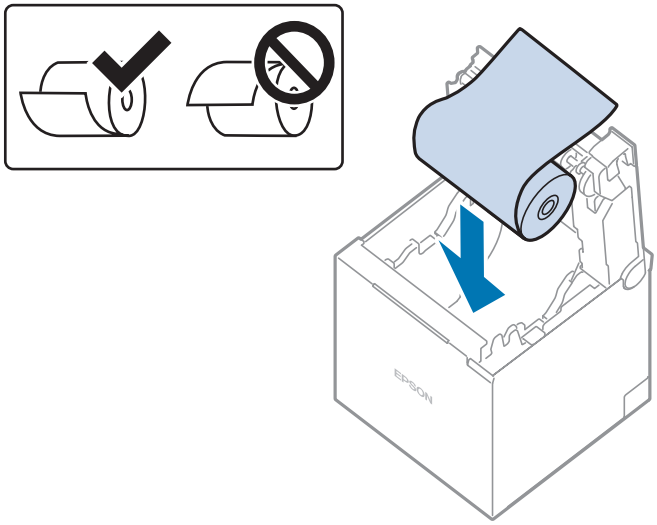

CAUTION

- Before installing the roll paper, take up any slack in the roll paper by pulling its leading edge. If you install a slack roll paper, a paper jam or print quality problems may occur.

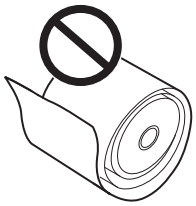

- Before installing the roll paper, make sure that the roll paper is not deformed. Using a deformed roll paper will cause the printer to malfunction.

4 Pull out some paper, and close the roll paper cover.

When the printer power is on, the roll paper is automatically cut.

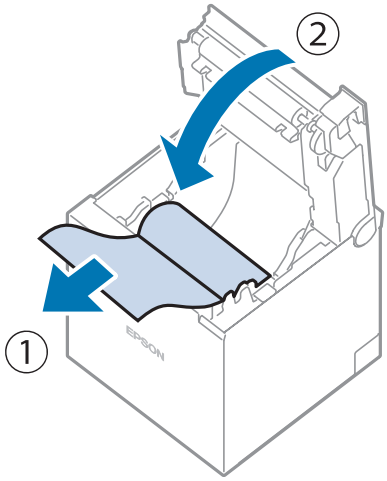

When Ejecting Paper Frontward

1 **Use the cover open lever to open the roll paper cover.**

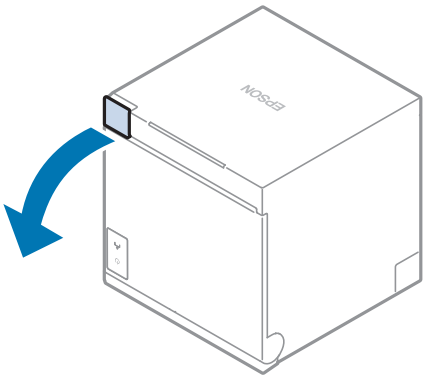

2 **Remove the used roll paper or roll paper core, if any.**

3 **Install the roll paper in the correct direction.**

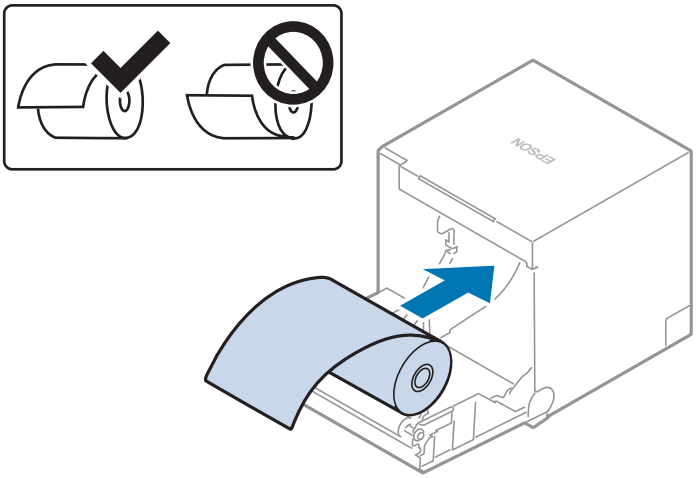

CAUTION

- Before installing the roll paper, take up any slack in the roll paper by pulling its leading edge. If you install a slack roll paper, a paper jam or print quality problems may occur.

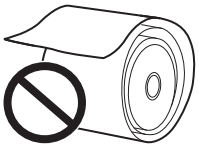

- Before installing the roll paper, make sure that the roll paper is not deformed. Using a deformed roll paper will cause the printer to malfunction.

4 **Pull out some paper, and close the roll paper cover.**

When the printer power is on, the roll paper is automatically cut.

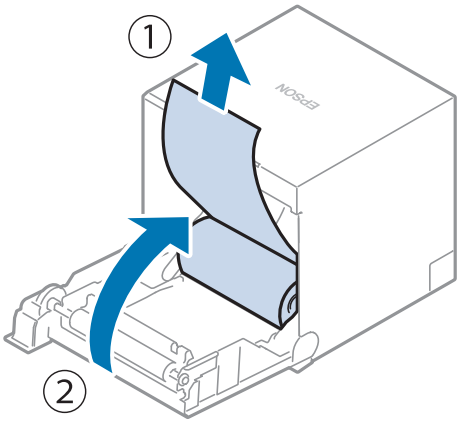

Removing Jammed Paper

CAUTION

Do not touch the thermal head and its surroundings. After printing, the thermal head and its surroundings can be very hot.

CAUTION

When a paper jam occurs, never pull out the paper forcibly.

Follow the steps below if the roll paper is jammed.

1 **Turn off the printer.**

2 **Open the roll paper cover.**

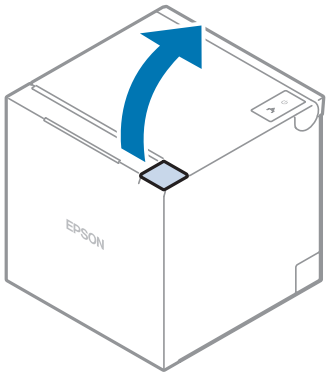

3 **Remove the jammed paper.**

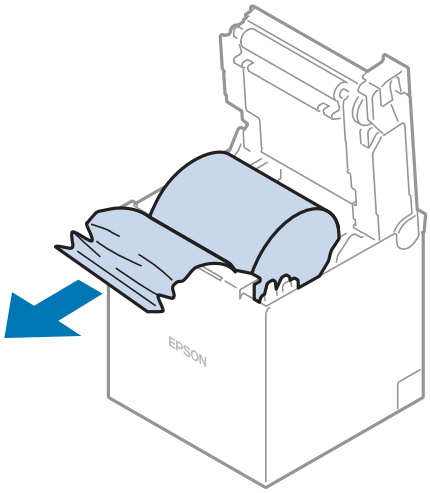

4 **Close the covers.**

Roll Paper Cover does not Open

When the roll paper cover does not open using the lever, restart the printer.

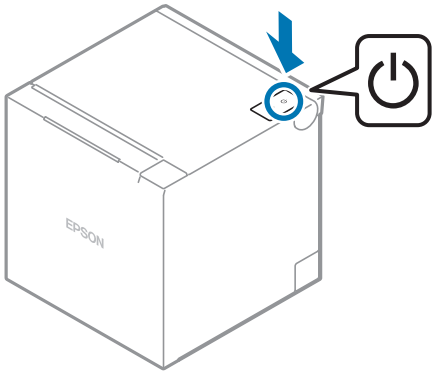

Cleaning the Printer

Cleaning the Printer Case

Be sure to turn off the printer, and wipe the dirt off the printer case with a dry cloth or a damp cloth. Be sure to unplug the AC cable while cleaning.

CAUTION

Never clean the product with alcohol, benzine, thinner, or other such solvents.
Doing so may damage or break the parts made of plastic and rubber.

Cleaning the Thermal Head/Platen Roller

Epson recommends cleaning the thermal head to maintain receipt print quality. We recommend cleaning periodically (about once every 3 months). To clean the thermal head, use a cotton swab moistened with an alcohol solvent (ethanol or isopropyl alcohol).
Depending on the roll paper used, paper dust may stick to the platen roller and the paper may not be fed correctly. To remove the paper dust, clean the platen roller with a cotton swab moistened with water. Turn on the product power only after the water has completely dried.

CAUTION

- **After printing, the thermal head and its surroundings can be very hot. Do not touch it and let it cool before you clean it.**
- **Do not damage the thermal head by touching it with your fingers or any hard object.**
- **Remove static electricity before cleaning the thermal head. Static electricity may damage the thermal head.**

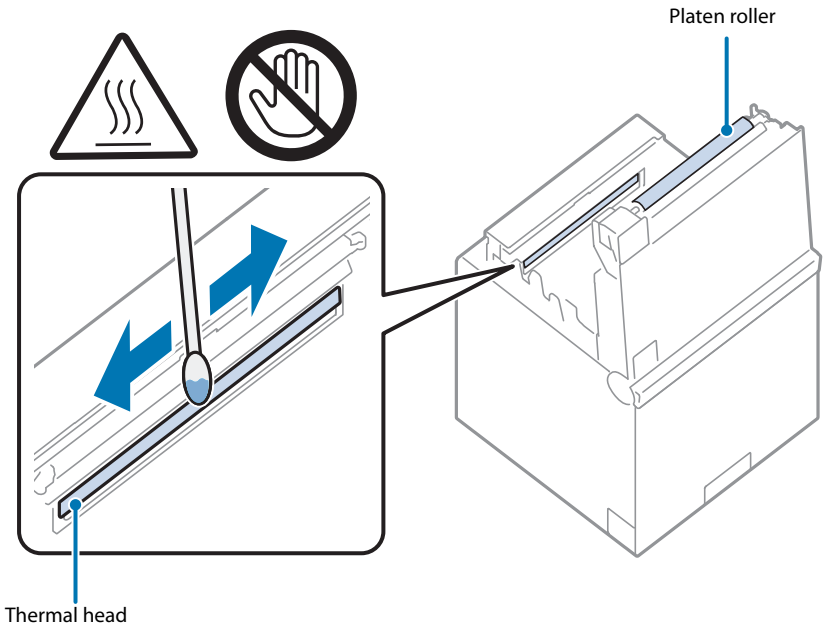

Preparing for Transport

Follow the steps below to transport the printer.

1 **Turn off the printer.**

2 **Confirm that the Power LED is off.**

3 **Disconnect the AC cable from the socket.**

4 **Remove the roll paper.**

5 **Pack the printer in the orientation for upward paper ejection, maintaining the vertical direction.**

The side with the power button and paper feed button is the top side.

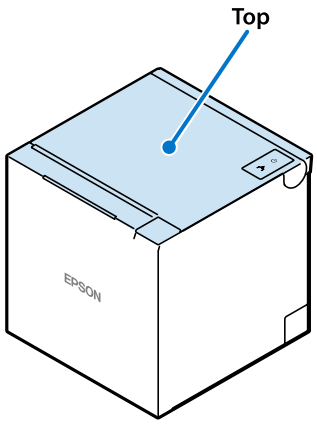

When Using the Printer for a Self-Service Terminal

Precautionary measures should be taken at self-service terminals to prevent users from holding the paper or blocking the paper exit during printing, since touching the paper during printing or before the paper cut is completed may result in paper jams or auto-cut failure.

Notes on Cutting Paper Completely

- When the printer is installed to eject printed paper upward and is set to cut the paper completely, be sure to remove the cut paper from the paper exit before starting the next print. Failure to do so may cause the paper to remain in the auto cutter section, resulting in poor cutting.
- When the printer is installed to eject printed paper frontward and is set to cut the paper completely, the cut paper will fall, so please prepare a box to catch it.

Appendix

Product Specifications

Printing method		Thermal line printing
Printing direction		Two directional with friction feed
Paper feed speed		200 mm/s {5.9"/s} (continuous paper feeding with the Feed button)
Cutting method		Selectable between partial cut (leaving one point in the center uncut) and full cut.*1 Default: partial cut
Interface	USB-A	Supplies up to 0.5 A, USB 2.0 High-Speed
	USB-B	USB 2.0 Full-Speed
	USB-C	Supplies up to 1.5 A, USB 2.0 High-Speed
	USB-PD	Delivers up to 18 W (12 V/1.5 A or 9 V/2 A), USB 2.0 High-Speed
	Ethernet	10BASE-T/100BASE-TX
	Wireless LAN	IEEE802.11b/g/n or IEEE802.11a/b/g/n/ac
	Bluetooth	Bluetooth 5.0 Dual mode
Buffers	Receive buffer	4 KB
	Downloaded buffer (user-defined characters and user-defined images)	12 KB
	NV graphics memory	384 KB
Barcode/ two-dimensional symbol printing		UPC-A, UPC-E, JAN8 / EAN 8, JAN13 / EAN13, Code39, Code93, Code128, ITF, CODABAR(NW-7), GS1-128, GS1 DataBar, Code128 auto, PDF417, QR code, Maxi Code, Data Matrix, Aztec Code, Two-dimensional GS1 DataBar, Composite Symbology
Cash drawer function		2 drives
Supplied voltage		Power supply by AC adapter (AC Adapter, T1 recommended)
Current consumption*2 (at 24 V)		1.8 A
AC power consumption (100 to 230V/ 50 to 60 Hz)*2	Operating	Approx. 33.7 W (AC 115 V/60 Hz)
	Standby	Approx. 1.9 W (AC 115 V/60 Hz)

Life*3	Printer mechanism	20 million lines (printing + paper feeding)
	Thermal head	200 km
	Autocutter	Partial cut: 2.2 million cuts Full cut: 1.5 million cuts Note: If both partial cut and full cut are used, cut life varies from the above depending on usage conditions.
MTBF*4		360,000 hours
MCBF*5		70 million lines
Temperature/Humidity		Operating: 5 to 45°C {41 to 113°F}, 10 to 90% RH Storage: -20 to 60°C {-4 to 140°F}, 10 to 90% RH
Overall dimensions (W × D × H)		Ejecting paper upward: 127 X 127 X 130 mm (5.0 × 5.0 × 5.1") Ejecting paper frontward: 127 X 128 X 129 mm (5.0 × 5.0 × 5.1")
Weight (mass)		1.3 kg {2.8 lb}

*1: The cutting method can be changed by a command.

*2: According to our operation conditions. It may differ depending on the usage conditions and product model.

*3: Indicates the point at which the wear-out failure period starts.

*4: Indicates the mean time between failures during the random failure period.

*5: Indicates the overall mean time between failures, including wear-out and random failures, before the life is reached.

Printing Specifications

			Paper width 58 mm	Paper width 80 mm
Printing method			Thermal line printing	
Dot density			180 × 180 dpi	
Printing width	42/30 column mode (Standard column mode)		50.8 ± 0.2 mm {2.00 ± 0.01"}, 360 dots	72.2 ± 0.2 mm {2.84 ± 0.01"}, 512 dots
	48/36 column mode		50.8 ± 0.2 mm {2.00 ± 0.01"}, 360 dots	67.7 ± 0.2 mm {2.67 ± 0.01"}, 480 dots
The number of characters	42/30 column mode (Standard column mode)	Font A	30	42*1
		Font B	40*1	56
		Special Font A	30	42
		Special Font B	40	56
		Kanji Font A	15*1	21*1
		Kanji Font B	22	32
	48/36 column mode	Font A	36	48
		Font B	40	53
		Special Font A	30	40
		Special Font B	40	53
		Kanji Font A	15	20
		Kanji Font B	22	30
Line spacing			4.23 mm {0.17"} (initial setting, programmable by command)	
Maximum print speed*2			500 mm/s {9.84"/s}*3	
Multi-tone graphics printing			Up to 16 shades of gray (when printed on Epson specified paper)	

dpi: dots per inch

*1: Initial setting

*2: When the printer prints with the standard print density level at 25°C {77°F} and 24V.

*3: The maximum is 100 mm/s {3.94"/s} when printing ladder barcodes, 2-dimensional symbols, or multi-tone graphics.

CAUTION

- The print speed changes automatically depending on the applied voltage and head temperature.
- If the data transmission speed is slower than the maximum print speed, the print speed may fluctuate and the print result may become shaded and/or dot displacement in paper feeding may occur. Furthermore, if the data transmission speed is much slower than the maximum print speed (for example, when using Bluetooth LE), intermittent printing will occur.

Character Specifications

Character set		ANK	95 alphanumeric characters
			128 extended graphics characters x 43 pages (includes user-defined pages)
			18 international character sets
		Japanese	6,879 characters of JIS X0208-1990, 845 special characters
			11,233 characters of JIS X0213:2004, One special character
		Simplified Chinese	28,553 characters of GB18030-2000
		Traditional Chinese	13,502 characters of Big5
		Korean	8,224 characters of KSC5601
Character code*1		Japanese	ISO-2022-JP / Shift_JIS / Shift_JIS-2004
		Simplified Chinese	GB18030-2000
		Traditional Chinese	Big5
		Korean	KSC5601
		Unicode*2	UTF-8
The number of dots per character	42/30 column mode (Standard column mode)	Font A	12 × 24 (includes 2-dot horizontal spacing)
		Font B	9 × 17 (includes 2-dot horizontal spacing)
		Special Font A	12 × 24 (includes 2-dot horizontal spacing)
		Special Font B	9 × 24 (includes 2-dot horizontal spacing)
		Kanji Font A	24 × 24
		Kanji Font B	16 × 16
	48/36 column mode	Font A	10 × 24 (includes 1-dot horizontal spacing)
		Font B	9 × 24 (includes 2-dot horizontal spacing)
		Special Font A	12 × 24 (includes 2-dot horizontal spacing)
		Special Font B	9 × 24 (includes 2-dot horizontal spacing)
		Kanji Font A	24 × 24
		Kanji Font B	16 × 16

Character size*3 (W × H)	42/30 column mode (Standard column mode)	Font A	1.41 × 3.39 mm {0.06 × 0.13"}
		Font B	0.99 × 2.40 mm {0.04 × 0.09"}
		Special Font A	1.41 × 3.39 mm {0.06 × 0.13"}
		Special Font B	0.99 × 3.39 mm {0.04 × 0.13"}
		Kanji Font A	3.39 × 3.39 mm {0.13 × 0.13"}
		Kanji Font B	2.26 × 2.26 mm {0.09 × 0.09"}
	48/36 column mode	Font A	1.27 × 3.39 mm {0.05 × 0.13"}
		Font B	0.99 × 2.40 mm {0.04 × 0.09"}
		Special Font A	1.41 × 3.39 mm {0.06 × 0.13"}
		Special Font B	0.99 × 3.39 mm {0.04 × 0.13"}
		Kanji Font A	3.39 × 3.39 mm {0.13 × 0.13"}
		Kanji Font B	2.26 × 2.26 mm {0.09 × 0.09"}

*1: Installed character codes vary by printer model.

*2: Only the character sets installed on the printer can be printed.

*3: Space between characters is not included. Characters can be scaled up to 64 times as large as the standard size.

NOTE

By specifying UTF-8 character encoding, all the installed character sets can be printed.
For more details on printing Unicode characters, see "FS (C" of the ESC/POS command reference, or manual of the software you use. ("Application Development Information" on page 95)

Paper Specifications

		Paper width 58 mm	Paper width 80 mm
Paper types		Specified thermal paper	
Form		Roll paper	
Size	Roll paper diameter	83 mm {3.27"} maximum	
	Roll paper core	Outside: 18 mm {0.71"}	
	Roll width when taken up	58 + 0.5/-1.0 mm {2.28 + 0.02/-0.04"}	80 + 0.5/-1.0 mm {3.15 + 0.02/- 0.04"}
	Paper width	57.5 ± 0.5 mm {2.26 ± 0.02"}	79.5 ± 0.5 mm {3.13 ± 0.02"}
	Paper thickness	Maximum of 80 µm, minimum of 48 µm	
Specified original paper type		AP45KS-ND, AP50KS-ND Jujo Thermal Oy P5047(55) Mitsubishi HiTec KT55FA, KT48FA, KT55PF, KT48PF Koehler Paper Group	

CAUTION

- Paper must not be pasted to the roll paper core.
- To keep the print quality, it is recommended to change the print densities for each roll paper. See "Software Settings" on page 65.
- Use of thermal paper with a pre-printed recording surface should be avoided. Using it can cause the thermal head to stick to the thermal paper surface during printing, and cause printing failure and other problems. The pre-printing also can result in reduced print density. Using thermal paper with a pre-printed recording surface, pre-printing should be done in accordance with the conditions (ink type, printing and other conditions) recommended by the paper manufacturer, and the thermal paper should be checked to ensure that there is no faulty printing, loss of print density, or other problems.

Printable Area

For paper width 80 mm

The maximum printable area of paper with a width of 79.5 ± 0.5 mm {3.13 ± 0.02"} is 72 ± 0.2 mm (512 dots), and the approximate space is 3.65 mm on both sides.

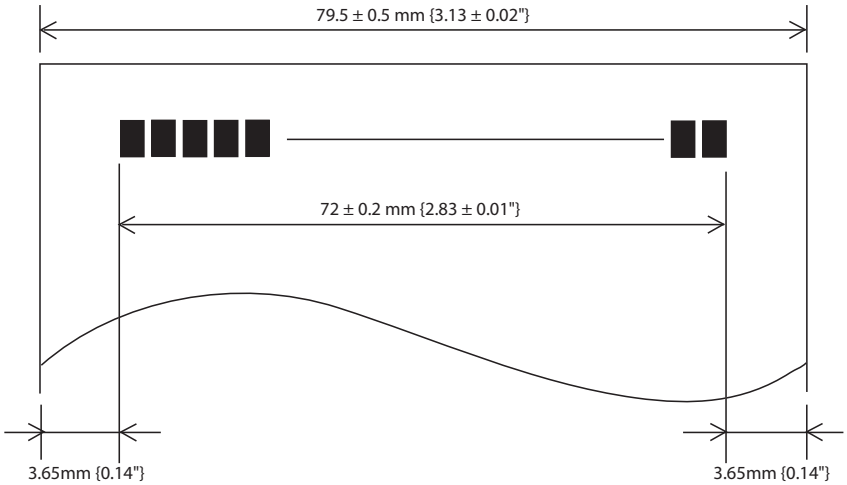

For paper width 58 mm

The maximum printable area of paper with a width of 57.5 ± 0.5 mm is 50.8 ± 0.2 mm (360 dots), and the approximate space is 3.37 mm on both sides.

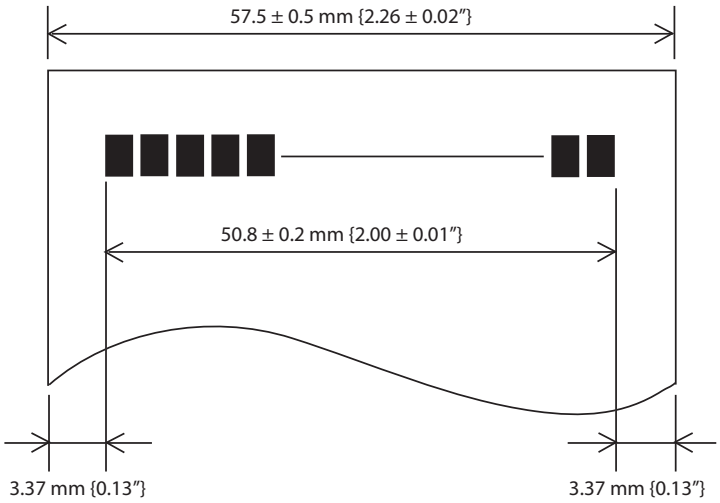

Printing and Cutting Positions

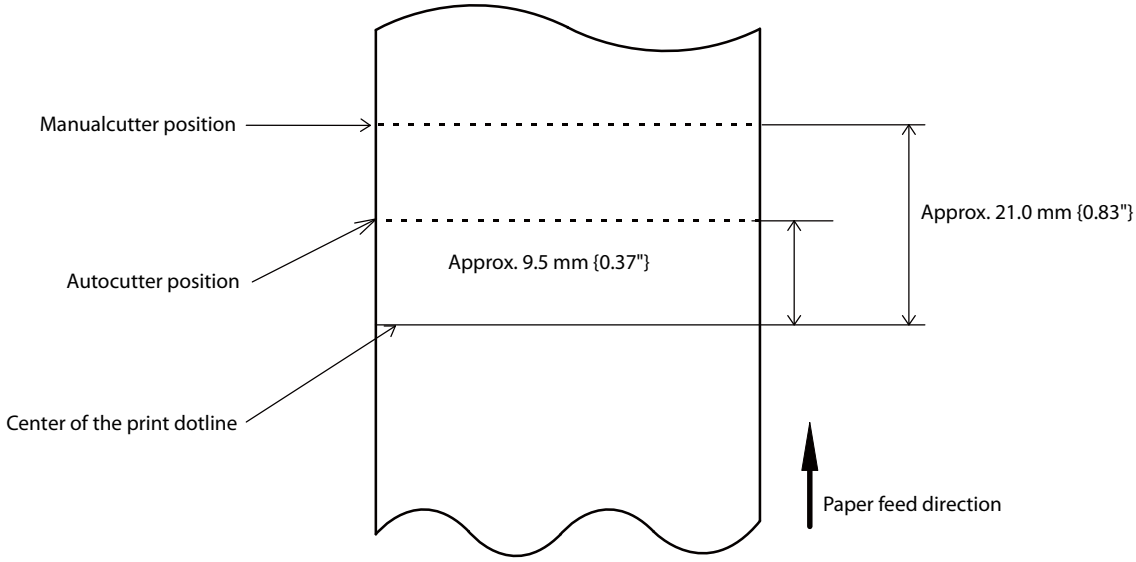

CAUTION

- The values above may vary slightly as a result of paper slack or variations in the paper. Take this into account when setting the cutting position of the autocutter.
- When removing cut paper, the remaining roll paper is pulled at the uncut section and the pitch of the next print may be reduced. When printing after cutting paper for prints with no pitch reduction, feed the paper about 1 mm {16/406 inches} before printing. When the Pre-feed before next print function is enabled, this operation is performed automatically. See"Software Settings" on page 65 for more details.

Electrical Characteristics

Operating voltage		DC +24 V±7%
Current consumption (24V, 25°C, standard print density)	Standby*1	Mean: 0.1 A
	Operating*2	Mean: 1.8 A* *: When charging at 2.1A Note: When print ratio is approximately 18% • Continuous printing for 30 lines (repeating 20H-7FH) ∗ Font A, 48 columns, ASCII character • 5 lines feeding • Autocutting

*1: The value is measured under our operating conditions.

*2: The value is measured under our operating conditions without connecting peripheral devices to the printer.

Environmental Conditions

Temperature/ Humidity	Operating	5 to 45°C {41 to 113°F}, 10 to 90% RH (See the operating temperature and humidity range below.)
	Storage	-20 to 60°C {-4 to 140°F}, 10 to 90% RH (except for paper)
		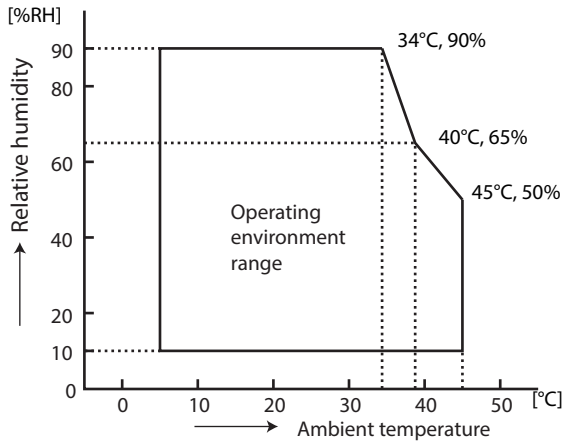
Vibration resistance	When packed	Frequency: 5 to 55 Hz Acceleration: Approximately 19.6 m/s^2 {2G} Sweep: 10 minutes (half cycle) Time: 1 hour Orientation: x, y, and z There is no external or internal visible damage and the unit operates normally after being subjected to vibration.
Shock resistance	When packed	Packing: Epson standard package specifications Height: 60 cm {23.62"} Orientation: 1 corner, 3 edges, and 6 surfaces There is no external or internal visible damage and the unit operates normally after being dropped.
	When unpacked	Height: 5 cm {1.97"} Orientation: Lift one edge and release it (for all 4 edges) There is no external or internal visible damage and the unit operates normally after being dropped while not operating.
Acoustic noise (operating)		Approximately 55 dB (bystander position) Note: The values above are measured in the Epson evaluation condition. Acoustic noise differs depending on the paper used, printing contents, and the setting values, such as print speed or print density.
Drip proof function*		IPX2 equivalent Note: At front eject position.
Altitude		3,000 m or less

* The value measurements are equivalent to JISC0920 (IEC60529:2001) standard. Therefore, safety standard application, and failure and breakage of the printer are not guaranteed.

External Dimensions

When ejecting paper upward

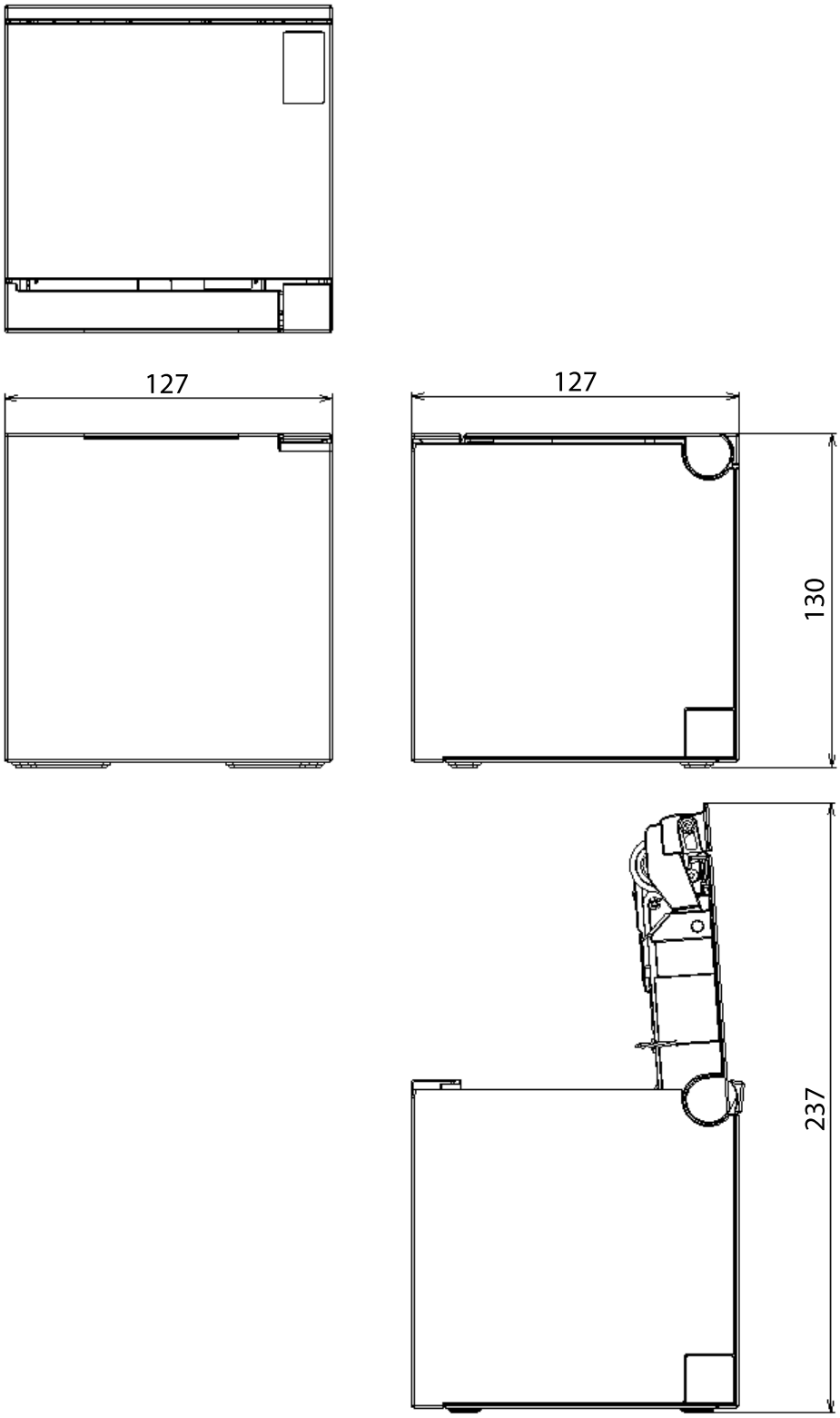

[Unit: mm]

When ejecting paper frontward

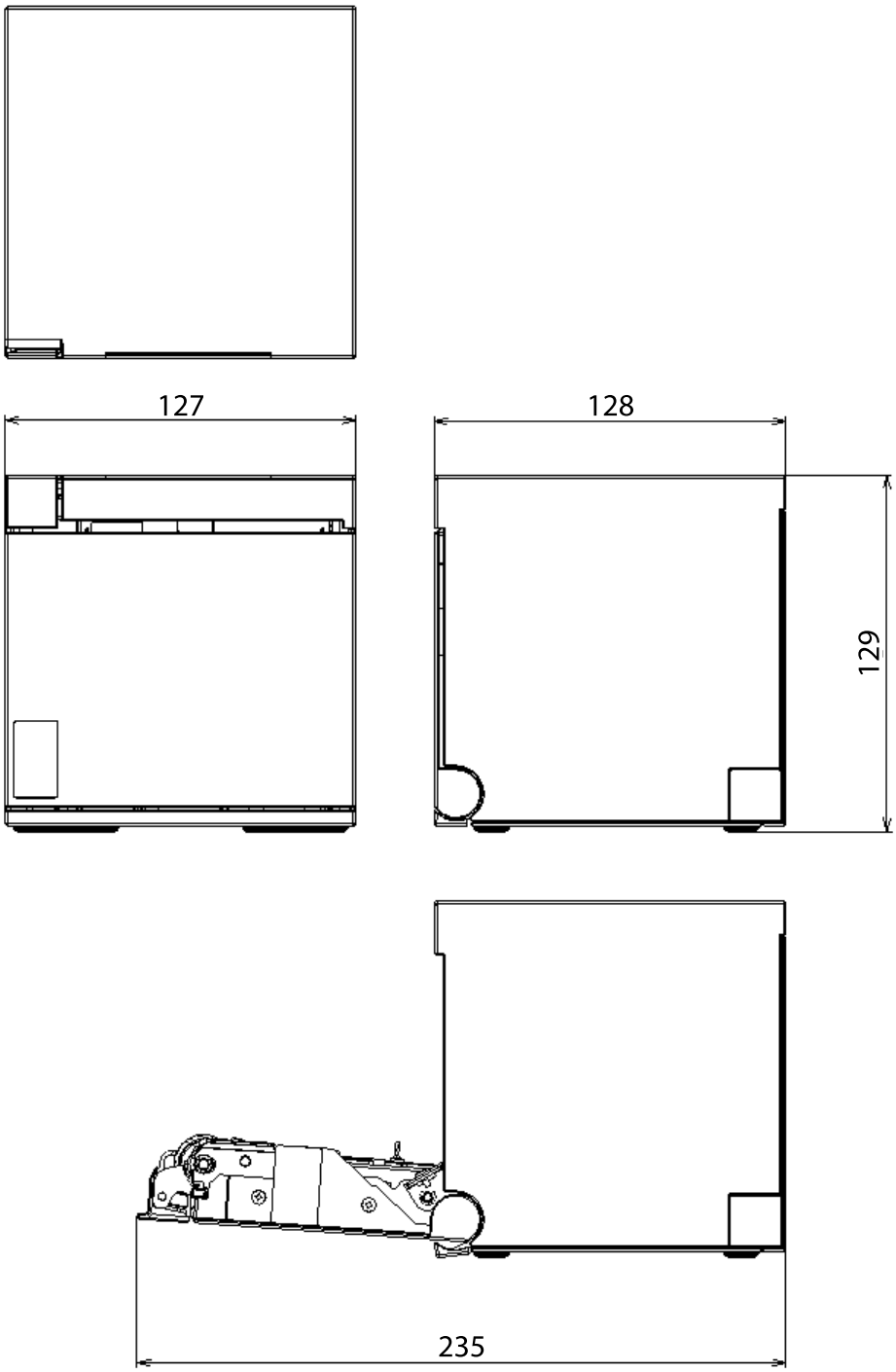

[Unit: mm]

When installing the printer in a housing

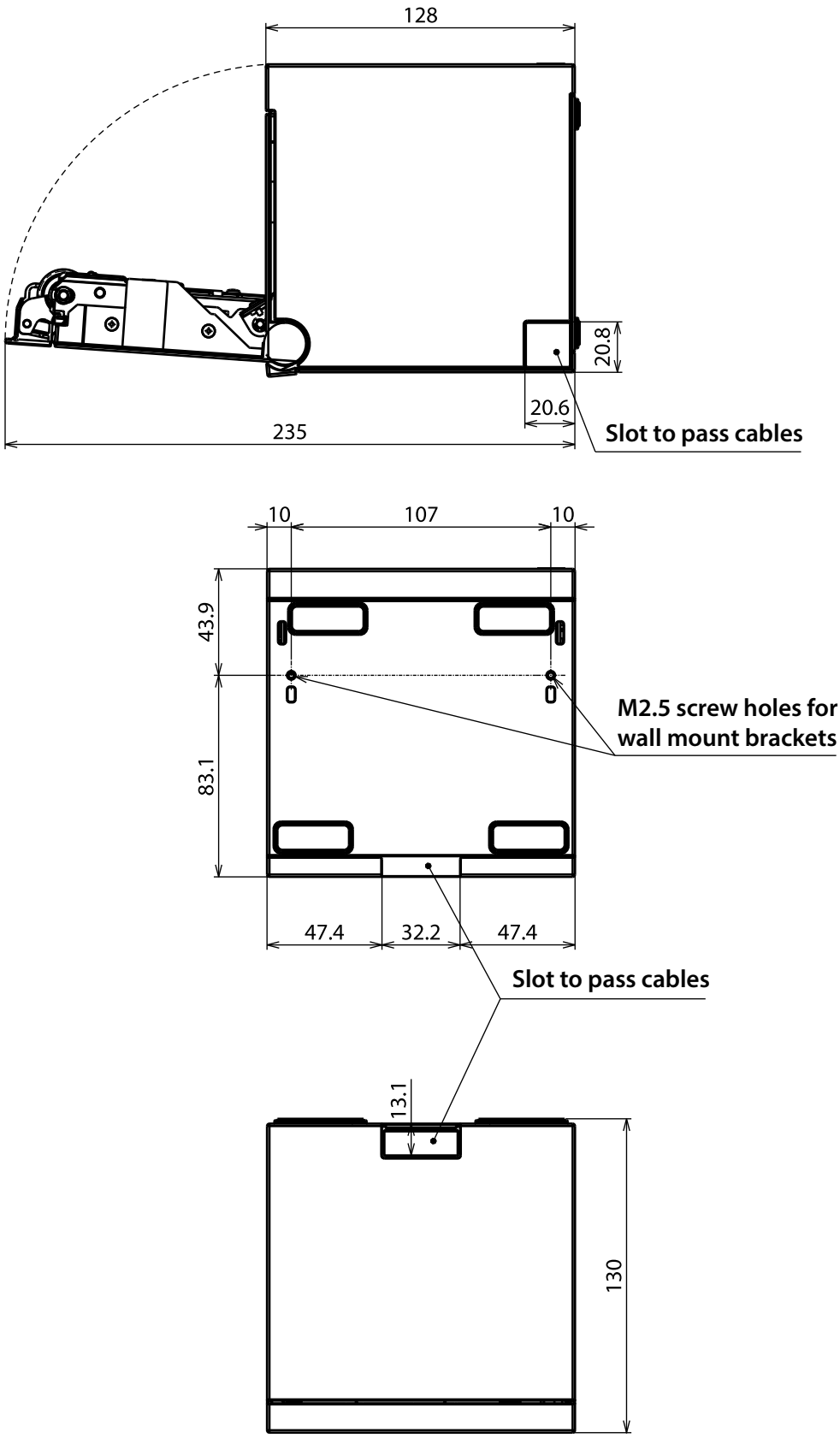

[Unit: mm]

Specifications of Interface and Connector

USB Interface

The printer is equipped with the following USB interfaces.

- USB-A connector
- USB-B connector
- USB-C connector
- USB-C connector (USB-PD compatible)

CAUTION

- Use a USB cable that complies with the USB 2.0 standard. Using a non-compliant cable may cause the printer to malfunction due to static electricity.
- Do not apply excessive force to the connectors. Doing so may damage the connectors.

USB-A Connector Specifications

On-board connector: USB Standard-A connector

Item		Specifications
USB communication	Version	USB 2.0
	Transfer rate	High Speed (480 Mbps)
USB power supply	Voltage	5 V
	Supply current	Up to 0.5 A

USB-B Connector Specifications

On-board connector: USB Standard-B connector

USB communication

Item		Specifications
Version		USB 2.0
Transfer rate		Full Speed (12 Mbps)
Communication method		USB bulk transfer
Power supply		USB self-powered function
USB bus current consumption		2 mA
USB packet size (with Full-Speed connection)	USB bulk OUT	64 bytes
	USB bulk IN	64 bytes
USB device class		Switchable between USB vendor-defined class and USB printer class. For USB device class settings, see "Software Settings" on page 65.

USB Descriptor

Item		USB vendor-defined class	USB printer class
Vendor ID		04B8h	
Product ID		0202h	0E34h
String Descriptor	Manufacturer	EPSON	
	Product	TM-m50II-H	
	Serial number	String based on the product serial number	

USB-C Connector Specifications

On-board connector: USB Type-C connector

Item		Specifications
USB communication	Version	USB 2.0
	Transfer rate	High Speed (480 Mbps)
	Data flow	Downstream-facing port (DFP)
USB power supply	Voltage	5 V
	Supply current	Up to 1.5 A

USB-C connector (USB-PD compatible) Specifications

On-board connector: USB Type-C connector

Item		Specifications
USB communication	Version	USB 2.0
	Transfer rate	High Speed (480 Mbps)
	Data flow	Upstream-facing port (UFP)
USB power supply	Maximum power	18 W (12 V at 1.5 A, or 9 V at 2 A)
	Voltage	5 V, 9 V, 12 V
	Supply current	5 V: Up to 3 A 9 V: Up to 2 A 12 V: Up to 1.5 A

CAUTION

- Use a genuine cable for your smart device or USB device, or a USB certified cable. Also, when using a Lightning cable, use an MFi certified cable.
- Charging may not be possible depending on the charging specifications of the smart device.
- It may take a few seconds for the smart device to start charging as it sets the optimal current value. Charging may also be stopped once immediately after connection.
- If a device exceeding the rated current is connected to the USB-C connector (USB-PD compatible), charging to the device will stop.
- Depending on how the smart device is used, it may not be fully charged. (For example, when the screen brightness is at maximum, or when the sleep function (turning off the screen) is disabled.)
- To communicate with the printer via Bluetooth while connecting a smart device such as a tablet device to the USB-C connector (USB-PD compatible), set [USB-PD Mode] to [Source Fixed].
  See "Software Settings" on page 65 for setting instructions.
- The voltage used for USB power supply is selected by the smart device and cannot be selected by the printer.
- When communicating with an iOS device via Bluetooth, USB communication with an iOS device connected to the USB-C connector (USB-PD compatible) is not possible. For more details, see "Available Smart Devices and Notes" on page 37.

Network Interface

For both Ethernet interface and Wi-Fi interface

Support protocols

Protocols	Usage
IP, ARP, ICMP, UDP, TCP	Basic communication protocols
LP, LPR, TCP Socket Port	Printing protocols
HTTP/HTTPS	Used in ePOS-Print and Web Config
SNMP, ENPC	Used in setting and monitoring
DHCP, APIPA	Used in automatic setting for the IP address and so on

Network parameters

Item	Initial settings
IP address acquisition	Automatic
APIPA	Disabled
Socket Timeout	90 seconds
SNMP IP Trap 1	Disabled
SNMP IP Trap 2	Disabled
Communication mode	Auto negotiation

Printing communication protocol

- LP, LPR: Transfers printing data
- TCP Socket Port: Transfers printing data and printer status via bidirectional direct socket communication.

LP, LPR

- Max. simultaneous connections: 6
- Number of connections for which printing is available: 1 (occupied until the connection is released.)
- Time out: 90 seconds (changeable)
- Job cancel: Not available
- Banner printing: Not available

Socket communication

• Port type	TCP communication port for direct printing
• Port number	9100
• Port communication direction	bidirectional
• Max. simultaneous connections	6
• Number of connections for which printing is available	1 (occupied until the connection is released.)
• Time out:	90 seconds (changeable)

For Ethernet interface

Communication specifications

10BASE-T/100BASE-TX

For Wi-Fi Interface

Countries and regions where Wi-Fi can be used are limited. Since notes are provided for each country or region, check the sheet supplied with the product.

When using wireless LAN, make sure you disconnect the LAN cable. If a LAN cable is connected, wireless LAN is disabled.

Specification

- IEEE802.11b/g/n (2.4 GHz band) or IEEE802.11a/b/g/n/ac (2.4 GHz or 5 GHz band) compliant Wi-Fi communication compatible.
- Support the IP address automatic acquisition function (DHCP, APIPA).
- Infrastructure mode is supported.

Communication Standard*

- IEEE802.11b (2.4 GHz)
- IEEE802.11g (2.4 GHz)
- IEEE802.11n (2.4 GHz)
- IEEE802.11a (5 GHz)
- IEEE802.11n (5 GHz)
- IEEE802.11ac (5 GHz)

* The frequency bands that can be used vary depending on the model.

Security

Security can be selected from among the following:

- WPA-PSK(AES)
- WPA2-Personal
- WPA2/WPA3-Enterprise
- WPA3-SAE

Initial settings

These settings apply when the printer is initialized in the Interface Setup mode.

Parameter	Setting value
Communication standard	Auto
Network mode	Infrastructure mode
SSID	EpsonNet
Encryption type	None
Passphrase	None

* You can connect to a WPA2-PSK (AES) access point using the settings above.

Settings in SimpleAP mode (Factory default settings)

Parameter	Setting value
SSID	DIRECT-TM-m50II-H-"serial number"
Passphrase	Serial number

* In SimpleAP mode, DHCP Server is working and assign IP address to host automatically.

Notes on use

- When you initialize or change the printer settings, the printer is reset to reflect the settings. It may take about 1 minute depending on the network settings or environment. Also, your application may indicate power off during the time waiting for reset. In that case, wait for about 1 minute, and then reconnect to the printer.
- In areas where Wi-Fi communication is congested, your application may erroneously recognize that communication is disconnected and indicate power off due to response delay. Also, depending on the combination with the access point used, Wi-Fi communication performance may be degraded. Both of these issues may be improved by disabling the Wi-Fi power saving function (Power Save). However, since the power saving function is disabled, the printer will consume more power. The setting can be changed using Web Config or TM-m50II Utility.

Bluetooth Interface

CAUTION

Countries and regions where Bluetooth can be used are limited. Since notes are provided for each country or region, check the sheet supplied with the product.

Specification

- Bluetooth 5.0 Dual mode
- Bluetooth Power Class 2
- Built-in antenna
- Device name setting is possible
- The maximum number of devices that can be registered as the pairing information: 8 (Multi-pairing is supported.)
- The number of devices that can be connected at a time: 1 (Multi-point connection is not supported.)
- Bluetooth LE

  Supported OS:
  iOS, Android *

  The following features of Bluetooth LE are not supported:
  2 Msym/s PHY for LE (LE 2M PHY), LE Long Range (LE Coded), LE Advertising Extensions

  * For information on how to connect to an Android device via Bluetooth LE, please contact Epson sales company.

Initial Settings

Setting Contents	Setting Items	Initial Settings
Bluetooth communication settings	Bluetooth device name	Classic: "TM-m50II-H_xxxxxx" Bluetooth LE: "TM-m50II-H_xxxxxx-L" (where "xxxxxx" is the last six digits of the serial number.)
	Bundle Seed ID	"TXAEAV5RN4"
	Enable/Disable auto reconnect to iOS device	"1" (Enable)
	Bluetooth Security	Middle
	Bluetooth communication interval during power saving mode	Level 1 (Standard)

CAUTION

When the security level is set to "Low", pairing is always possible, which increases the possibility of unauthorized use by a third party. Change the setting at your own discretion and responsibility with full understanding of the risk.

NOTE

If the maximum number of registered devices is exceeded when pairing a new device, the oldest pairing information is deleted from the printer.

Auto Reconnect Feature

The auto reconnect feature allows the printer to automatically restore a connection in the following situations if the Bluetooth connection to the iOS device is lost.

- When the printer is turned on
- When the signal is dropped and then restored

The following shows the printer operations and connection methods when the auto reconnect feature is enabled or disabled.

Auto Reconnect Feature	Enabled	Disabled
Printer operations when Bluetooth is disconnected	Perform the following reconnection sequence. **[Reconnection sequence]** 1. The printer tries to connect to the iOS device to which it was last connected. 2. When step 1 fails, the printer waits for connections from other devices. 3. If connection is not established in step 2, the printer tries again to connect to the iOS device to which it last connected. Steps 1 and 2 are repeated until a connection is established.	Wait for a connection from the Bluetooth device.
Reconnecting to iOS device	Reconnect automatically.	Make settings on the Bluetooth settings screen on the iOS device.
Switch to connection from other device	Method 1: After disabling the Bluetooth feature of the connected iOS device, make connection settings on the Bluetooth device that you want to connect. (When the auto reconnect feature is enabled, it may take some time to connect.)	
	Method 2: After disconnecting from the connected iOS device using applications with the Epson TM Utility or Epson ePOS SDK disconnection feature, make settings on the Bluetooth device you want to connect.	

* In the following situations, even if the feature is enabled, the same operations are performed as when it is disabled.
  - When the last Bluetooth device connected was not an iOS device.
  - When wireless communication settings are initialized from the printer.
  - When the Bluetooth connection is cut from the "Printer Selection" screen of the Epson TM Utility.
  - When the Bluetooth connection is cut using disconnectDevice API for Epson ePOS SDK for iOS.
  - When the last connection was made using Bluetooth LE.
* We recommend disabling this feature when using the printer from devices that are not running iOS.
* When using a single printer between multiple iOS devices, disable this feature to prevent unintended reconnections via Bluetooth. Otherwise, if you cut the Bluetooth connection using disconnectDevice API on an iOS device that stopped using the printer, the connection will just be restored when the printer is restarted.

Notes on use

Time required until printing starts

- If the host computer and the printer are not connected on a continuous basis but rather connected every time the printer starts printing, some time may be needed for the printer to actually start printing after the host computer commands printing. This pause is the time required for processing the connection between the host computer and the printer.
  After opening the port, leave an interval of 300 msec or more before sending data to the port.
- After turning on the printer, wait until the initialization process is complete (about 40 seconds) before printing or making settings via Bluetooth.

Timing to shut the connection off

Even if data transfer from the application on the host computer has already been completed, the data may remain in the printer's internal buffer. Since data remaining in the buffer may be discarded when the connection is disconnected, when disconnecting the wireless connection immediately after printing, use status or other means to confirm that the transmitted data has been printed reliably.

If a connection between the host computer and the printer is shut off while the printer is offline, it may not be re-established. In this case, first clear the printer offline causes, and then try to re-establish the connection.

Multi-tone printing

When performing multi-tone printing over Bluetooth, the print speed may fluctuate or intermittent printing may occur due to data transfer conditions, also the print shade may change or white lines may occur.

Notes when communicating with iOS devices

Print data deletion and Bluetooth disconnections occur

Situation

Depending on the specifications of the iOS device, print data sent to the printer may be deleted. When this occurs, the Bluetooth connection between the printer and the iOS device is disconnected.

Conditions

This occurs when the printer is not ready to print, and 64 KB or more of print data is sent to the printer.

<Status in which the printer cannot print>

- When the roll paper cover is open
- When the paper is out

Solution

Do not send data to the printer if the printer is not ready to print.

For developers using the SDK from Epson, see the User's Manual - Chapter 3 Programming Guide - "Printing After Checking the Printer Status".

Since Bluetooth is disconnected when this occurs, if the auto reconnect feature is not enabled, you need to reconnect from the Bluetooth settings screen on the iOS device.

When using the SDK from Epson, this connection process is not necessary.

NFC Tag

Transmission standard	ISO14443 A
Frequency	13.56 MHz
Memory	144 byte
Transmission distance	Approximately 10 mm from the NFC installation location.

NOTE

- The transmission distance is an estimate that depends on our experiment conditions and is not a guaranteed value.
- It varies based on the installation environment and target device.

Bluetooth Low Energy Technology Advertising

Introduction

The printer transmits Bluetooth Low Energy Technology Advertising Packets when [BLE Beacon] is enabled.

The printer also transmits Bluetooth Low Energy Technology Advertising Packet when it is turned on with Laird Connectivity's BT-820 connected to the printer's USB-A connector.

By default, the printer transmits the packet according to the iBeacon Format from Apple. You can also change the data that is transmitted by following the steps in "Changing the Bluetooth Low Energy Technology Advertising Packet" on page 144.

Glossary:

Term	Description
Bluetooth Low Energy Technology Advertising	The name of this function.
Bluetooth Low Energy Technology Advertising Packet	The data sent by this function from the printer.
Bluetooth adapter	The BT820 from Laird Connectivity. A USB dongle to connect to the USB Type A connector.
iBeacon	The format stipulated by Apple for Bluetooth low energy technology Advertising Packets When using the default settings for the printer (Bluetooth adapter installed in the printer and the printer is on), the Bluetooth low energy technology Advertising Packet is transmitted in iBeacon format.

Dongle specifications

Manufacturer: Laird Connectivity

Model name: BT-820

For setting methods and settings, see the TM-m50II Utility User's Manual.

Procedure

When you install the Bluetooth adapter, the printer is restarted and then the adapter is enabled.

When you uninstall the Bluetooth adapter, the printer is restarted and then the adapter is disabled.

The USB-PD is disabled.

If the printer is capable of Bluetooth communication, the Bluetooth function is disabled.

Bluetooth Low Energy Technology Advertising Packet Format

In the printer, the iBeacon format is used by default for the Bluetooth low energy technology Advertising Packet.

The UUID for the printer is "fac1ba2f-61a2-4d83-9a8c-60087c232569".

The user can edit the following specifications in the iBeacon format: UUID, Major number, Minor number, and Measured Power.

Table 1 iBeacon Packet Format

Content	Data Length	Value	Description
Length of this data	1 byte	02h	
AD type	1 byte	01h	Adtype: flags
Flags	1 byte	06h	Fixed value (06h)
Length of this data	1 byte	1Ah	Fixed value (1Ah)
AD type	1 byte	FFh	Adtype: Company identifier
Company Identifier code	2 bytes	004Ch	Apple's manufacture ID
iBeacon type	1 byte	02h	Incomplete List of 16-bit service UUIDs
iBeacon length	1 byte	15h	15h=21=16+2+2+1
UUID	16 bytes	-	Default UUID = fac1ba2f-61a2-4d83-9a8c-60087c232569
Major Number	2 bytes	-	
Minor Number	2 bytes	-	
Measured Power	1 byte	BDh	BDh: -66dB

Changing the Bluetooth Low Energy Technology Advertising Packet

The printer can acquire a configuration script from the printer.

You can also change settings by transmitting the configuration script to the printer.

The configuration script only supports UTF-8 encoding.

The iBeacon Format is defined in the configuration script by default for the printer.

You can change this Packet Format to support Eddystone-UID or Eddystone-URL.

However, the printer only supports single Advertising Data Packets.

You can change the settings using either of the following two methods.

- Changing settings using the Epson TM-m50II Utility for Windows (see the TM-m50II Utility User's Manual for details)
- Changing settings using an HTTP Request

The method of changing settings via an HTTP Request is explained below.

Digest authentication

You need Digest authentication to communicate with the printer.

The default ID and Password are ID: epson, Pass: serial number and are the same as the administrator for Network settings.

Escape processing for configuration scripts

When reading/writing a configuration script for a printer, the strings (content of the configuration script) being transmitted and received uses the following escape processing. However, escape is not performed for uXXXX (hexadecimal strings) such as Japanese.

Table 2 Escape Processing

Escape	Description
\"	quotation mark
\\	reverse solidus
\b	backspace
\f	form feed
\n	line feed
\r	carriage return
\t	tab
\u002F	solidus
\u003C	<
\u003E	>
\u002B	+

Acquiring the configuration script from the printer using an HTTP request

A response for the json format is acquired using the GET method for the HTTP request.

Request

Table 3 Request Header

Request header: Content-Type: text/plain; charset=utf-8 http://(printer IP address)/webconfig/beacon.cgi?Type=(one of the following Table 4 Types)

Table 4 Types

Type	Description
(none)	If a Type is left out, the same operation is performed as when current is specified.
current	Specifies the currently enabled configuration script.
volatile	Specifies the configuration script stored in RAM.

Type	Description
static	Specifies the configuration script stored in ROM.
default	Specifies the default configuration script.
status	Acquires information for the Bluetooth adapter.

Response

Table 5 Response Header

```
Content-Type: application/json; charset=utf-8
Access-Control-Allow-Origin: *
Access-Control-Allow-Methods: POST, GET, OPTIONS, HEADER
Access-Control-Allow-Headers: Content-Type, Content-Length, Authorization
X-Content-Type-Options: nosniff
X-XSS-protection: 1; mode=block
X-Frame-Options: deny
Content-Security-Policy: default-src 'none'
WWW-Authenticate: Digest realm="<IPaddr>", nonce="xxxxxxxxxxxxxxxxxxxxxxxxxxxxxxxxxxxx", qop="auth"
```

Table 6 Response

Function	GET Parameter	Results	Response
Acquires the configuration script currently enabled	Type=current Or no Type is set	Acquisition successful	200 OK
Acquires the configuration script on the RAM	Type=volatile	Acquisition successful	200 OK
		Acquisition failed (No file)	404 Not Found
Acquires the configuration script on the ROM	Type=static	Acquisition successful	200 OK
		Acquisition failed (No file)	404 Not Found
Acquires the Default configuration script	Type=default	Acquisition successful	200 OK
Acquires information from the Bluetooth adapter	Type=status	Acquisition successful	200 OK
		Acquisition failed (No adapter connected)	404 Not Found
Others	Type = Other than the above or A parameter except for Type exists	Type is invalid	400 Bad Request

Table 7 GET Response Body

Response Status	Response Body

200 OK	{
	"message": "Success"
	"detail": null
	"description" : <Encoded string for the configuration script>
	}

404 Not Found	 "message": "Requested file not found" "detail": null "description" : null }

400 Bad Request	{
	"message": "Invalid Parameter"
	"detail": null
	"description" : null
	}

Table 8 GET Response Body (Type=status)

Response Status	Response Body

200 OK
 	
The HCI Version for the Bluetooth adapter is 6 or higher
 	
Link
	{
	"message": "Success",
	"detail": null,
	"description" : {
	"VendorID": "0a12",
	"ProductID": "0001",
	"ProductName": "CSR8510 A10",
	"Bluetooth LE": "Support"
	}
	}

200 OK
 	
The HCI Version for the Bluetooth adapter is 5 or lower
	{
	"message": "Success",
	"detail": null,
	"description" : {
	"VendorID": "0a12",
	"ProductID": "0001",
	"ProductName": "(no name)",
	"Bluetooth LE": "Not support"
	}
	}

404 Not Found Adapter not connected	 "message": "Beacon dongle not connected", "detail": null, "description" : null }

Writing the configuration script to the printer

You can save a configuration script to the printer using the HTTP POST method.

You can save the configuration script to volatile or non-volatile memory.

When changing using a low frequency less than once an hour, you can save to non-volatile memory; however, when changing at a higher frequency, you need to save to volatile memory.

When the change is successful, the advertising data is changed.

Request

```
Content-Type: text/json; charset=utf-8
http://(printer IP address)/webconfig/beacon.cgi
```

See the POST parameters in Table 10 Response for the parameters.

Response

Table 9 Response Header

```
Content-Type: application/json; charset=utf-8
Access-Control-Allow-Origin: *
Access-Control-Allow-Methods: POST, GET, OPTIONS, HEADER
Access-Control-Allow-Headers: Content-Type, Content-Length, Authorization
X-Content-Type-Options: nosniff
X-XSS-protection: 1; mode=block
X-Frame-Options: deny
Content-Security-Policy: default-src 'none'
X-RateLimit-Limit: 1            (when type=static only)
X-RateLimit-Remaining: 1 or 0      (when type=static only)
X-RateLimit-Reset: 1390941626     (when type=static only)
WWW-Authenticate: Digest realm="<IPaddr>", nonce="xxxxxxxxxxxxxxxxxxxxxxxxxxxxxxxxxxxx", qop="auth"
```

Table 10 Response

Function	POST Parameters	Results	Response

Updating the configuration script in volatile memory	{
	“type” : “volatile”,
	“description”: “<The string for the configuration script that performed escape processing>”
	}
		Update successful	200 OK

		Update failed When the parameter is too long	413 Request Entity Too Large
		Update failed When an error occurs when applying a new configuration script	500 Internal Server Error

Deletes the configuration script from volatile memory	{
	“type” : “volatile”,
	“description”: “delete”
	}
		Deleting successful	200 OK

		Deleting failed	500 Internal Server Error

Function	POST Parameters	Results	Response

Updates the configuration script in non-volatile memory	{
	“type” : “static”,
	“description”: “<The string for the configuration script that performed escape processing>”
	}
		Update successful	200 OK
			
			It has following header:
			X-RateLimit-Limit: 1
			X-RateLimit-Remaining: 0
			X-RateLimit-Reset: xx

		Update failed When the parameter is too long	413 Request Entity Too Large It has following header: X-RateLimit-Limit: 1 X-RateLimit-Remaining: 1 X-RateLimit-Reset: xx
		Update failed When an error occurs when applying a new configuration script	500 Internal Server Error It has following header: X-RateLimit-Limit: 1 X-RateLimit-Remaining: 0 X-RateLimit-Reset: xx
		Update failed When the gap between updating is more than once an hour	429 Too Many Requests It has following header: X-RateLimit-Limit: 1 X-RateLimit-Remaining: 0 X-RateLimit-Reset: xx

Deletes the configuration script from non-volatile memory	{
	“type” : “static”,
	“description”: “delete”
	}
		Deleting successful	200 OK

		Deleting failed	500 Internal Server Error
Others	• No parameters • Invalid parameters • Error in escape processing	Update failed	400 Bad Request

Table 11 POST Response Body

Response Status	Body

200 OK	{
	"message": "Success",
	"detail": null,
	"description" : < The string for the configuration script that performed escape processing >
	}

400 Bad Request	{
	"message": "Invalid Parameter",
	"detail": "***", (see Table 12)
	"description" : null
	}

413 Request Entity Too Large	{
	"message": "Request Entity Too Large",
	"detail": null,
	"description" : null
	}

429 Too Many Requests	{
	"message": "You sent too many requests in a given amount of time.",
	"detail": null,
	"description": null
	}

500 Internal Server Error	{
	"message": "Failed to update settings",
	"detail": "***", (see Table 13)
	"description" : null
	}

Table 12 400 Bad Request Details

Case	Body

The correct escape processing is not performed at the point escape processing is needed	{
	"message": "Invalid Parameter",
	"detail": "Special characters must be escaped",
	"description" : null
	}

An undefined Type parameter has been specified	{
	"message": "Invalid Parameter",
	"detail": "A parameter 'type' is invalid",
	"description" : null
	}

Case	Body

No Type specified
Or an invalid parameter has been specified
	{
	"message": " Invalid Parameter ",
	"detail": "A parameter 'type' or 'description' is not specified",
	"description" : null
	}

When detecting a string with invalid escape processing	{
	"message": " Invalid Parameter ",
	"detail": "Invalid parameter is found",
	"description": null
	}

Table 13 500 Internal Server Error Details

Case	Body

Update failed	{
	"message": "Failed to update settings",
	"detail": null,
	"description" : null
	}

Deleting failed	{
	"message": "Failed to delete settings",
	"detail": null,
	"description" : null
	}

An error occurs when applying a new configuration script	{
	"message": " Failed to set the settings to the beacon.",
	"detail": <Error code from BeaconCtrl>
	"description" : null
	}

Editing the Configuration Script

In the configuration script, the settings for the module for Bluetooth in Linux can be written in the same way as for the Bluez hcitool, and you can customize the settings.

Make sure you include the following descriptors in the configuration script.

- Advertising stop
- Device address specifications
- Advertising parameter specifications
- Advertising start
- Advertising data specifications

Starting and stopping Bluetooth low energy technology Advertising

Format: cmd 0x08 0x000A n

Function: Starting and stopping transmission of the Advertising packet.

Parameter n	Length	Function
00	2 characters	Advertising stop
01	2 characters	Advertising start

NOTE

When specifying a start point, make sure you start Advertising using this command before "Bluetooth low energy technology Advertising Packet specifications" on page 153.

Device address specifications

Format: cmd 0x08 0x0005 n6 n5 n4 n3 n2 n1

Function: Specify a BD Address. Specify a value in Little Endian.

NOTE

As a Random Static Address is used in the printer, bit7 and bit6 for n1 need to be set to 1.

Bluetooth low energy technology Advertising parameter specifications

Format: cmd 0x08 0x0006 aL aH bL bH c d e f1 f2 f3 f4 f5 f6 g h

Function: Sets a variety of parameters for the Advertising packet.

Definition	Length	Default	Description
Min advertising Interval	2 bytes	aL: a0 aH: 00	00a0h * 0.625 = 100ms Period 00a0h is the minimum that can be specified.
Max advertising Interval	2 bytes	bL: a0 bH: 00	00a0h * 0.625 = 100ms Period 00a0h is the minimum that can be specified.
Advertising type	1 bytes	c: 03	03h: ADD_NONCONN_IND
Own address type	1 bytes	d: 01	01h: random device address
Peer address type	1 bytes	e: 00	00h: public device address
Peer address	6 bytes	f1-f6: 00	No use
Advertising channel map	1 bytes	g: 07	07h: All channel enabled
Advertising filter policy	1 bytes	h: 02	02h: Process scan requests from all devices and only connection requests from devices that are in the White List.

See the Bluetooth specifications for details.

Bluetooth low energy technology Advertising Packet specifications

Format: cmd 0x08 0x0008 d1 d2 … d32

Function: Sets the Data for the Bluetooth low energy technology Advertising packet.

Specify all from d1 to d32. If these are not necessary, specify 00 for each one.

Definition	Length	Default (iBeacon)	Description
Advertising data length	1 byte	d1: 1e	1eh: 30bytes
Advertising Data	31 bytes	d2: 02 d3: 01 d4: 06 d5: 1a d6: FF d7: 4c d8: 00 d9: 02 d10: 15	02h: Length
		d11-d26: fa c1 ba 2f 61 a2 4d 83 9a 8c 60 08 7c 23 25 69	TM UUID fac1ba2f-61a2-4d83-9a8c-60087c232569
		d27: 00 d28: Model No.	Major number The Default specifies the ID that indicates the model type using keywords shown in "Keywords" on page 154. You can also specify a direct value.
		d29: 00 d30: IP address 4th byte	Minor number The Default specifies the 4th sector of the IP address using keywords shown in "Keywords" on page 154. You can also specify a direct value.
		d31: BD	BD: -66dB
		d32: 00	00h: Fixed value

Keywords

You can specify the following keywords when describing the script.

Reserve String	Length	Content	Example
$SERIAL_ADDR	6 bytes	Address that uses 1 for the MSB2bit in the last 6 digits of the printer's serial number.	When the Serial No. is ABCD123456, the Address uses 1 for the MSB2bits for the leading 1 byte in the last 6 digits. F1:32:33:34:35:36 is generated and replaced with a string using 36 35 34 33 32 F1 sorted in Little endian.
$RANDOM_ADDR	6 bytes	Address in which the printer generates a random 6 byte number, and 1 is for the MSB2bit of the leading 1 byte.	Generates a random 6 byte number in the printer and replaces it with a string that sorts the Address using 1 for the MSB2bits for the leading 1byte in Little endian.
$IPn	1 byte	Value for #n in the printer's IP address.	When the IP address is 192.168.192.168, it is replaced with the following string. IP1: c0 IP2: A8 IP3: 64 IP4: c8
$MODEL_NO	1 byte	ID value assigned to the printer model.	27h is used for the TM-m50II-H. 00: no use 01: reserve 27: TM-m50II-H
$MACn	1 byte	Value for #n in the MAC address.	Available range: $MAC1,$MAC2, $MAC3, $MAC4, $MAC5, $MAC6

Character Code Tables

See the Character Code Tables for TM Printers that can be accessed from the following URL:

☞ https://support.epson.net/publist/reference_en/

Compatibility with USB-A

Devices can be connected to the USB-A connector of the TM-m50II-H in the following ways.

	TM-m50II-H	Direct connection	Secondary connection
(a)		Wireless LAN unit of OT-WL06	
(b)		Extension cable of OT-WL06	OT-WL06
(c)		Barcode scanner	
(d)		DM-D30/DM-D70	
(e)		DM-D30	OT-WL06
(f)		DM-D30	
(g)		Optional extension cable OT-UL30	DM-D30

NOTE

- Any USB conversion connectors and USB extension cables other than those above cannot be used.
- For (f), the barcode scanner must have a minimum operable voltage of 4.5 V or less.
- Barcode scanners with USB-HID interface or with CDC-ACM interface can be used.
- To use a barcode scanner, set the scanner suffix (delimiter) to CR (carriage return code). Data cannot be obtained using any other settings.
- Epson ePOS SDK version 2.9.0 or later supports barcode scanner control.